DECEMBER 21, 2005 (P= 7.40, Bo = -1.67, Lo = 21.18)

KITT PEAK MAGNETOGRAM--SOLIS

N **854.2 nm**

Bright = +
Dark = -

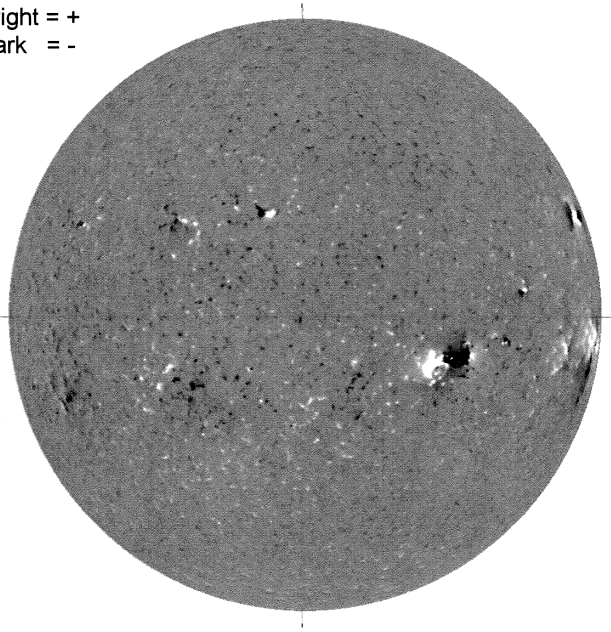

E-

1642 UT

STANFORD MAGNETOGRAM

N

Solid = +
Dashed = -

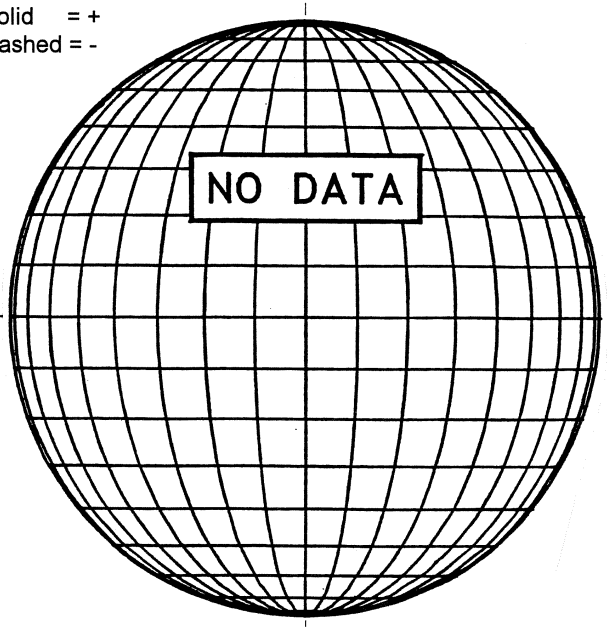

MT. WILSON MAGNETOGRAM

N

DeltaY = 20.1
DeltaX = 13.0

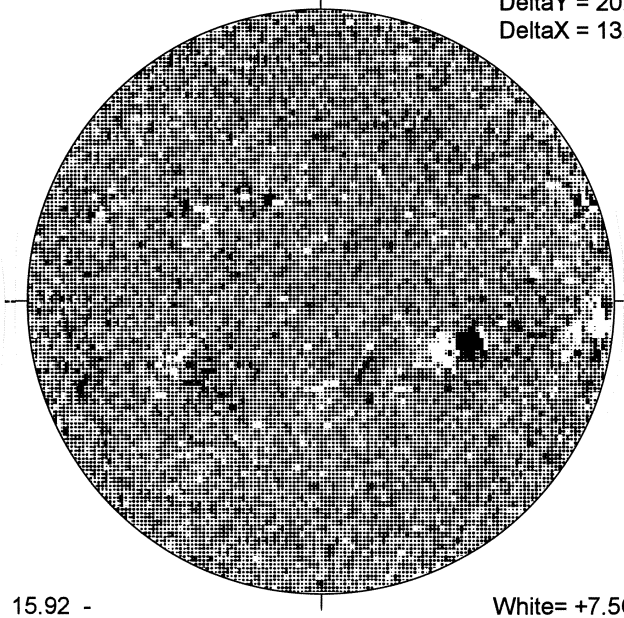

-W

15.92 -
16.35 UT

White= +7.5G
Black = -7.5G

KANZELHOHE H-ALPHA

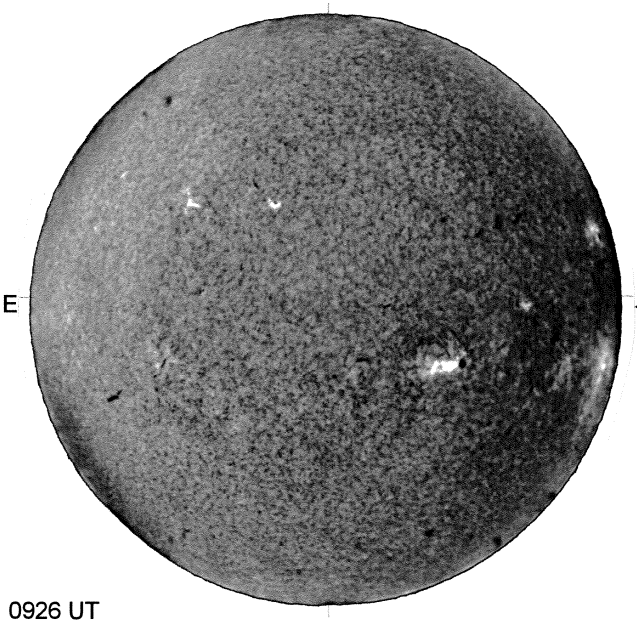

E

0926 UT

S

HOLLOMAN SUNSPOTS

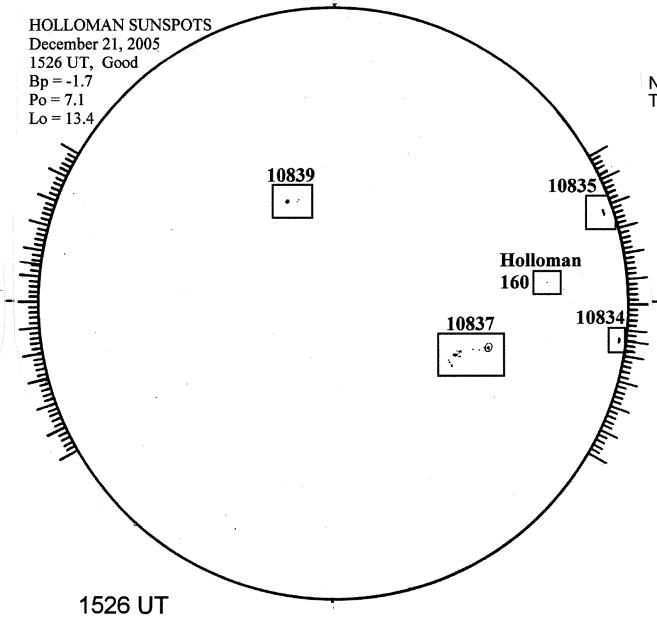

1526 UT

S

SACRAMENTO PEAK CORONA (1.15 Radii)----

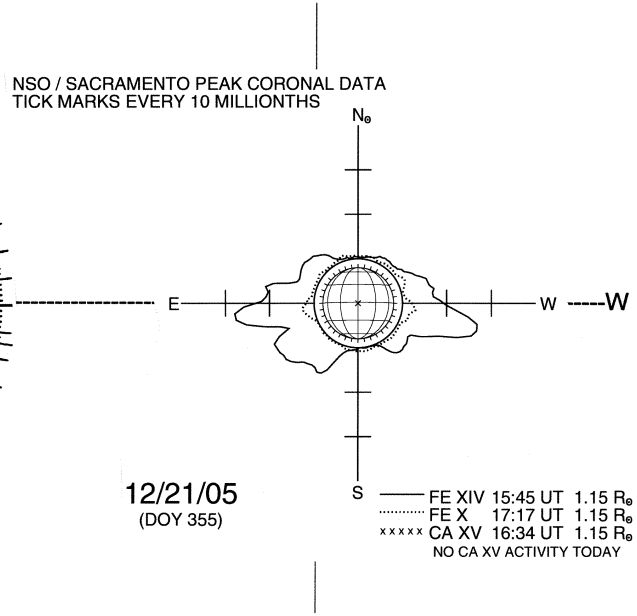

S