DECEMBER 7, 2005 (P= 13.66, Bo = 0.11, Lo = 205.64)

KITT PEAK MAGNETOGRAM--SOLIS

854.2 nm

Bright = +
Dark = -

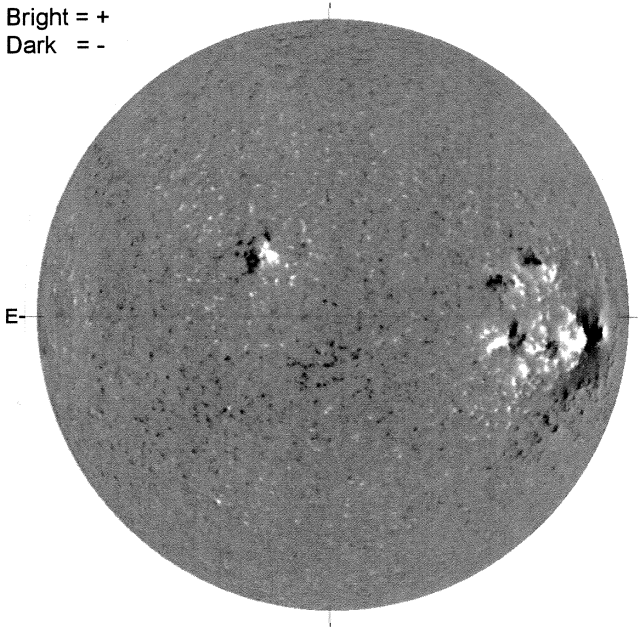

1957 UT

STANFORD MAGNETOGRAM

Solid = +
Dashed = -

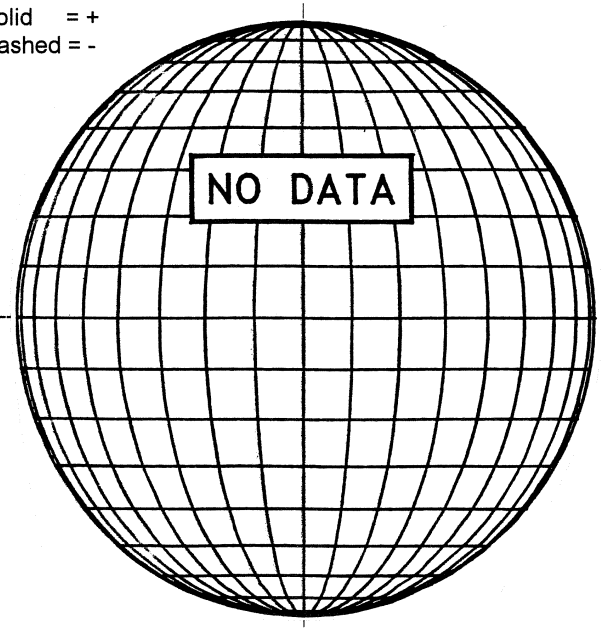

MT. WILSON MAGNETOGRAM

DeltaY = 13.1
DeltaX = 9.6

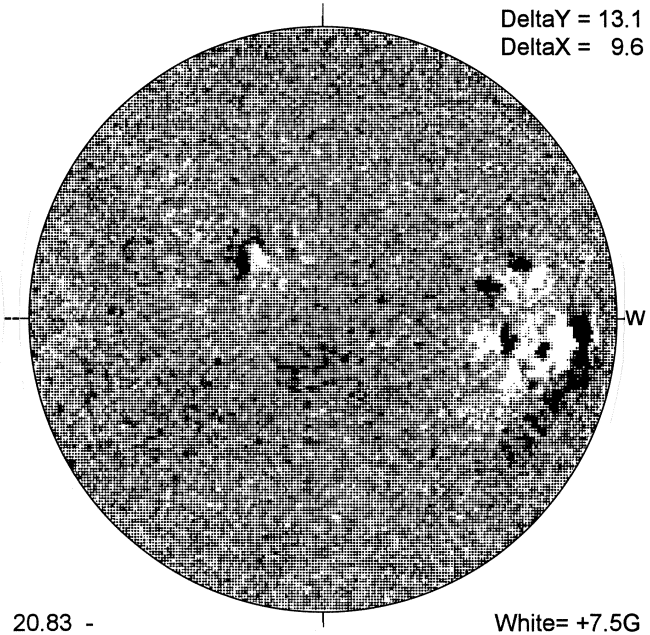

20.83 -
21.80 UT

White= +7.5G
Black = -7.5G

KANZELHOHE H-ALPHA

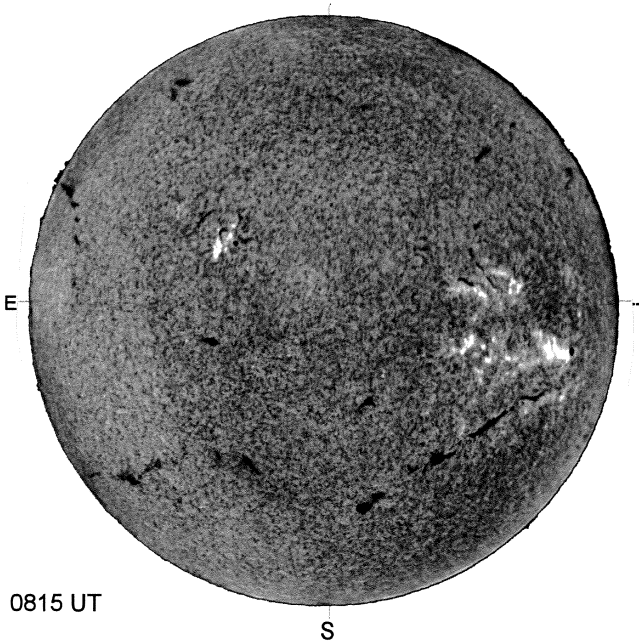

0815 UT

HOLLOMAN SUNSPOTS

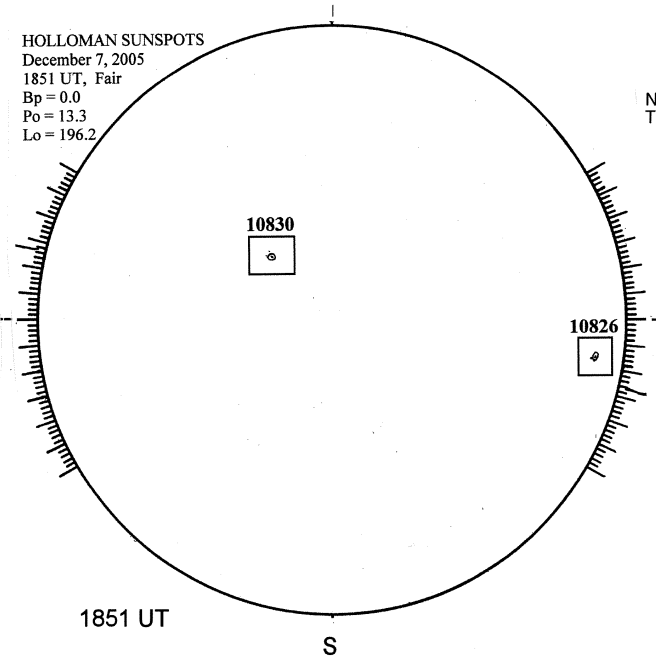

1851 UT

SACRAMENTO PEAK CORONA (1.15 Radii)

NSO / SACRAMENTO PEAK CORONAL DATA
TICK MARKS EVERY 10 MILLIONTHS

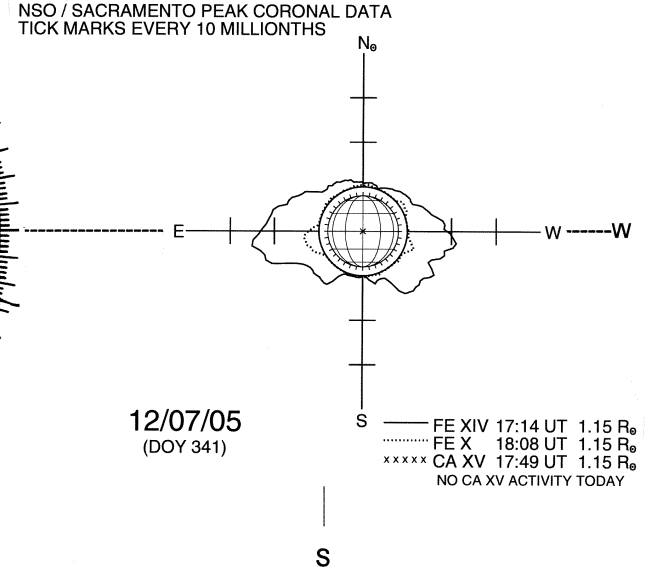

12/07/05
(DOY 341)