DECEMBER 6, 2005 (P= 14.08, Bo = 0.24, Lo = 218.82)

KITT PEAK MAGNETOGRAM--SOLIS

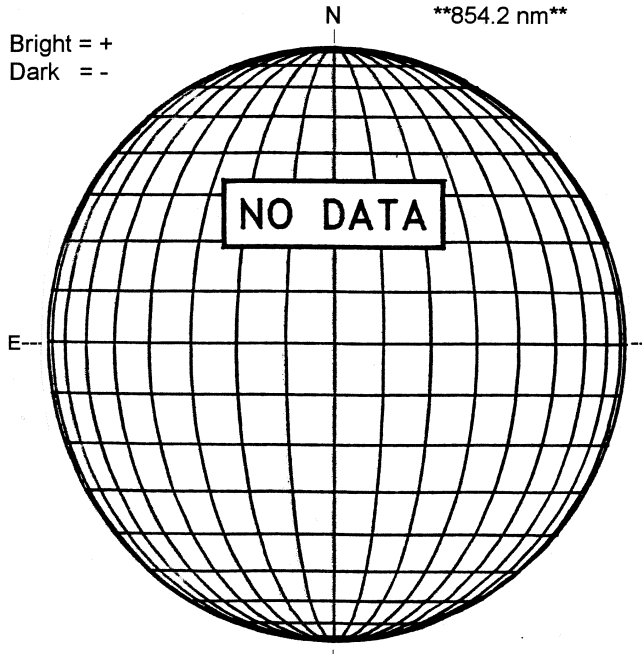

STANFORD MAGNETOGRAM

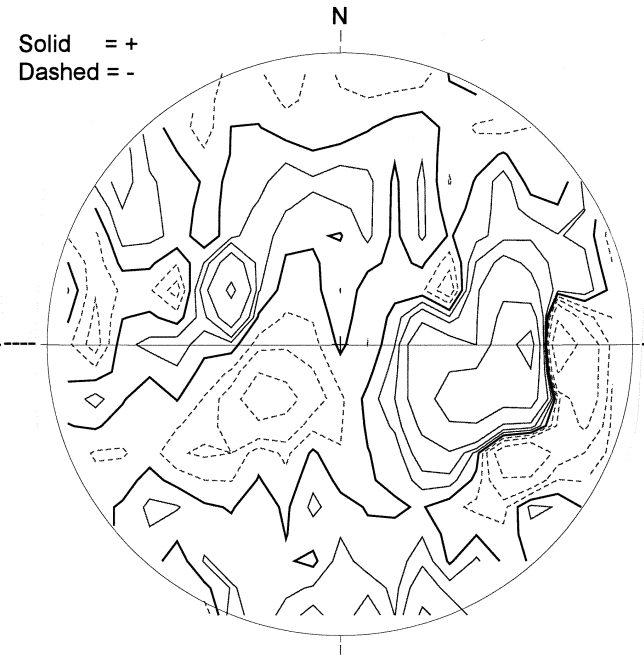

2028 UT

MT. WILSON MAGNETOGRAM

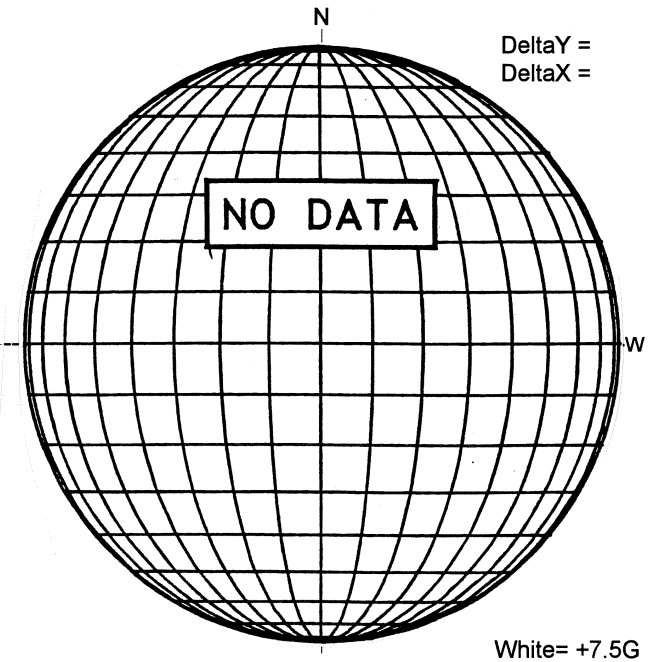

White= +7.5G
Black = -7.5G

CATANIA H-ALPHA

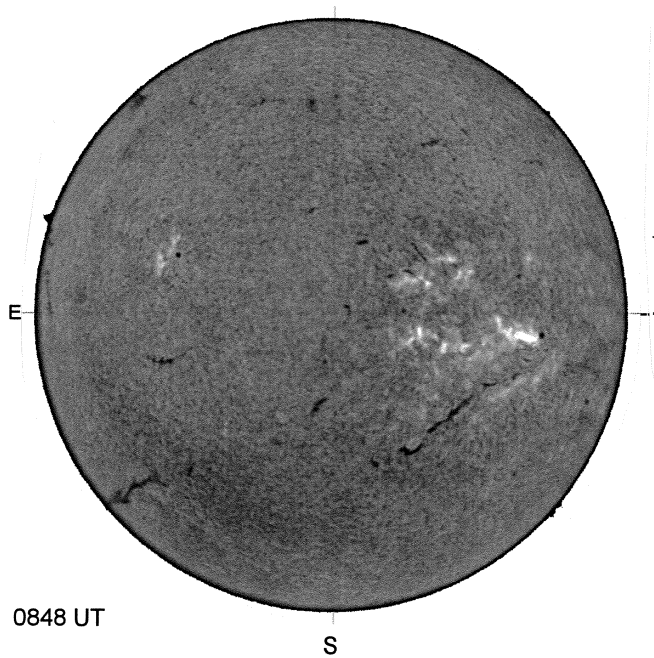

0848 UT

HOLLOMAN SUNSPOTS

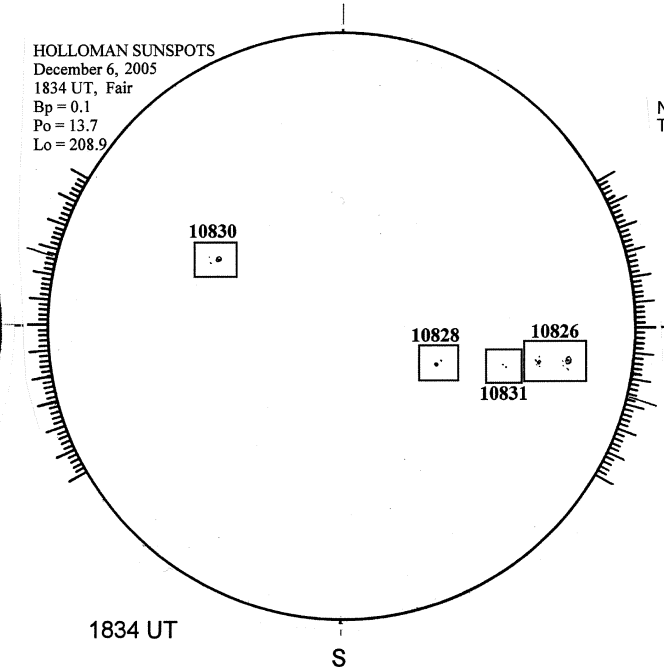

1834 UT
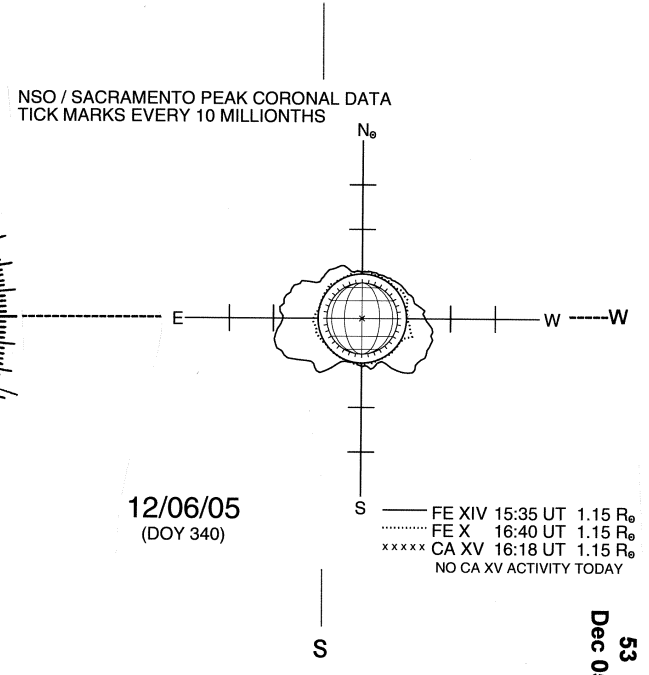
SACRAMENTO PEAK CORONA (1.15 Radii)----