DECEMBER 5, 2005 (P= 14.49, Bo = 0.36, Lo = 231.99)

KITT PEAK MAGNETOGRAM--SOLIS

854.2 nm

Bright = +
Dark = -

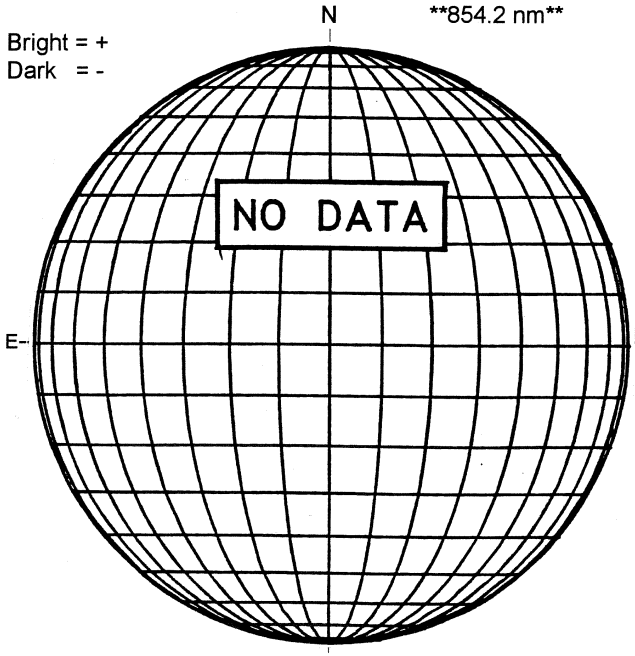

STANFORD MAGNETOGRAM

Solid = +
Dashed = -

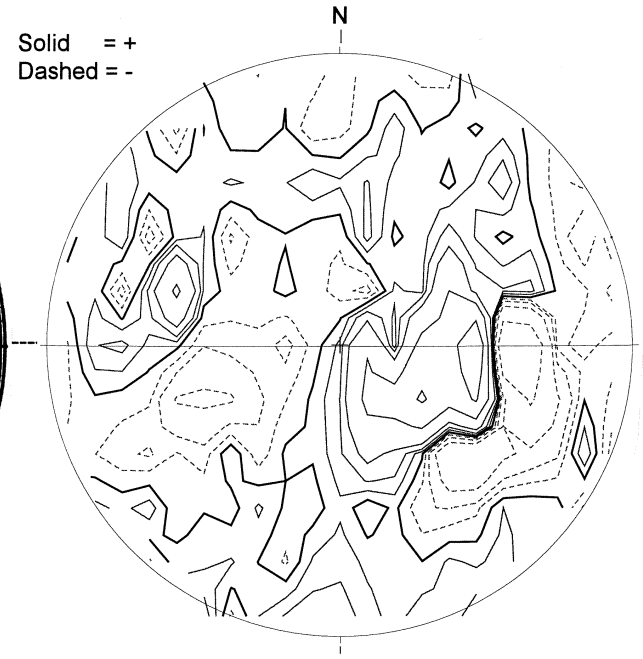

2056 UT

MT. WILSON MAGNETOGRAM

DeltaY = 13.1
DeltaX = 9.6

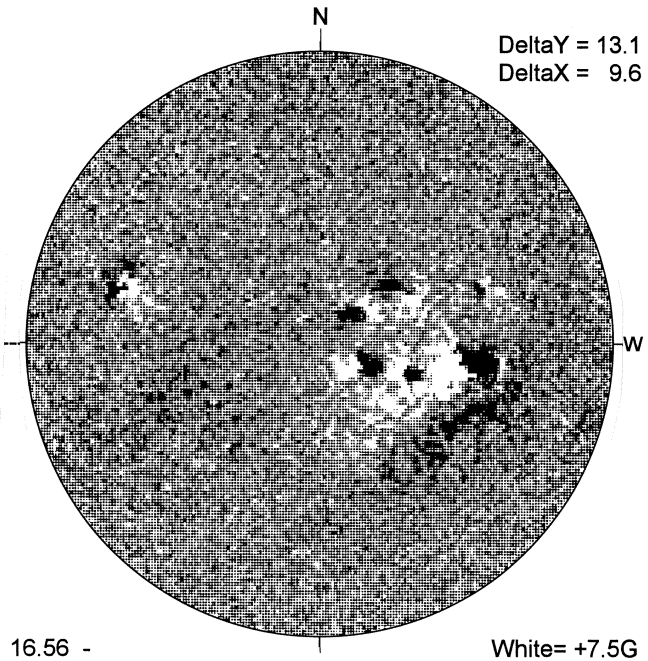

16.56 -
17.52 UT

White= +7.5G
Black = -7.5G

KANZELHOHE H-ALPHA

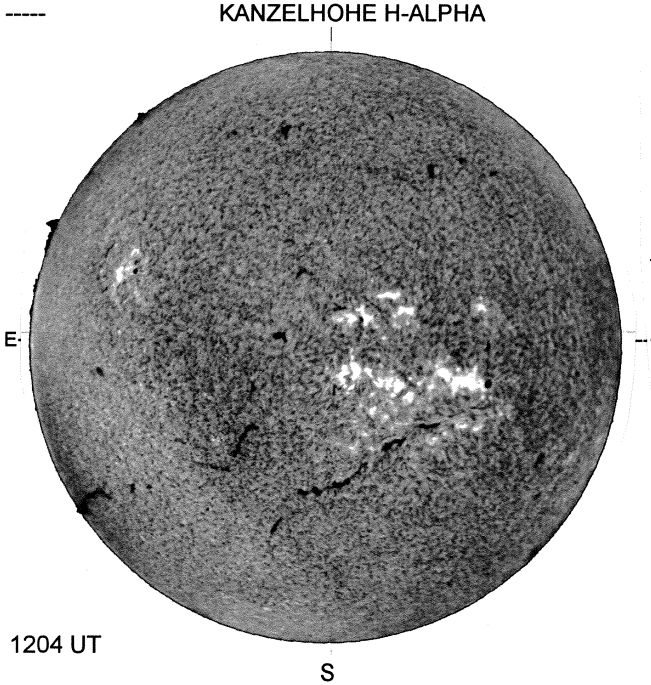

1204 UT

HOLLOMAN SUNSPOTS

HOLLOMAN SUNSPOTS
December 5, 2005
1613 UT, Good
Bp = 0.2
Po = 14.2
Lo = 224.4

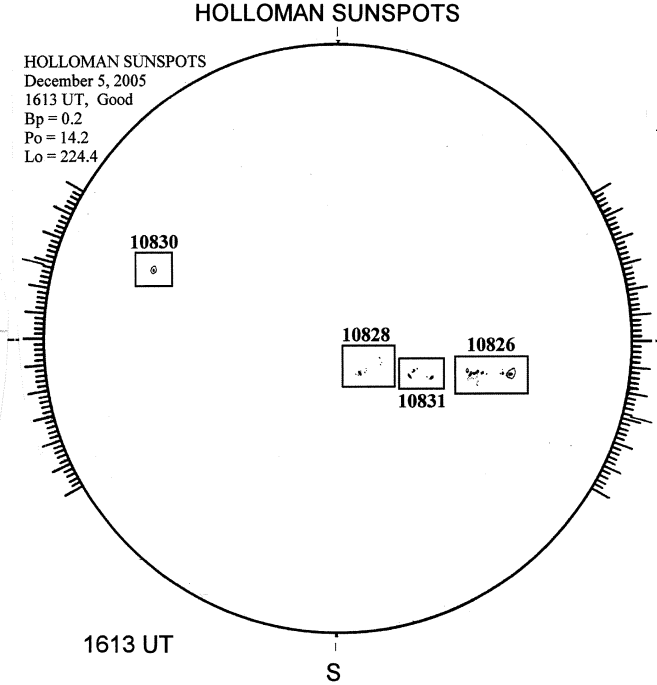

1613 UT

SACRAMENTO PEAK CORONA (1.15 Radii)

NSO / SACRAMENTO PEAK CORONAL DATA
TICK MARKS EVERY 10 MILLIONTHS

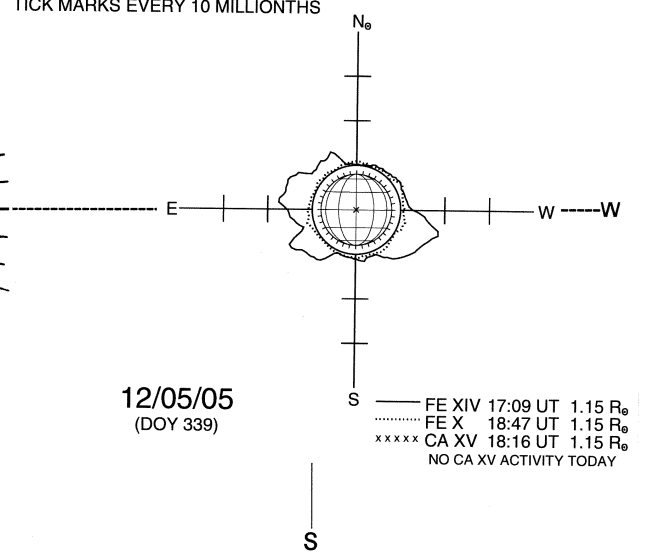

12/05/05
(DOY 339)

FE XIV 17:09 UT 1.15 R⊙
FE X 18:47 UT 1.15 R⊙
CA XV 18:16 UT 1.15 R⊙
NO CA XV ACTIVITY TODAY