DECEMBER 1, 2005 (P= 16.07, Bo = 0.88, Lo = 284.71)

KITT PEAK MAGNETOGRAM--SOLIS

Bright = +
Dark = -

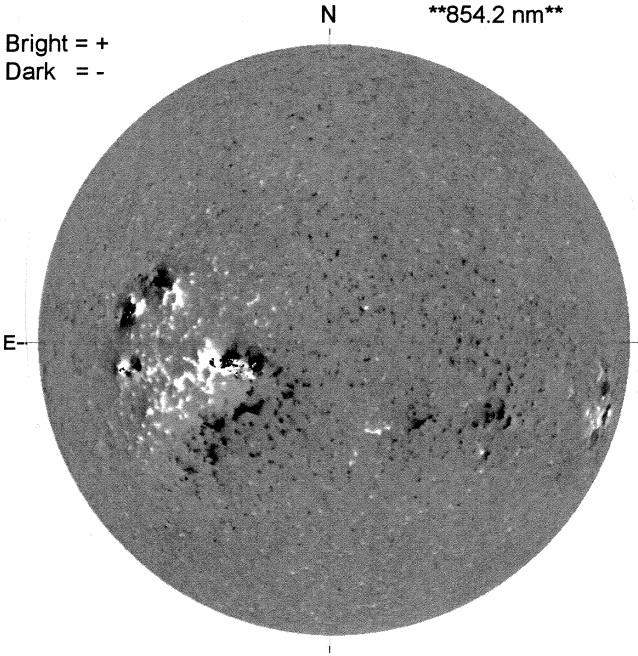

1849 UT

STANFORD MAGNETOGRAM

Solid = +
Dashed = -

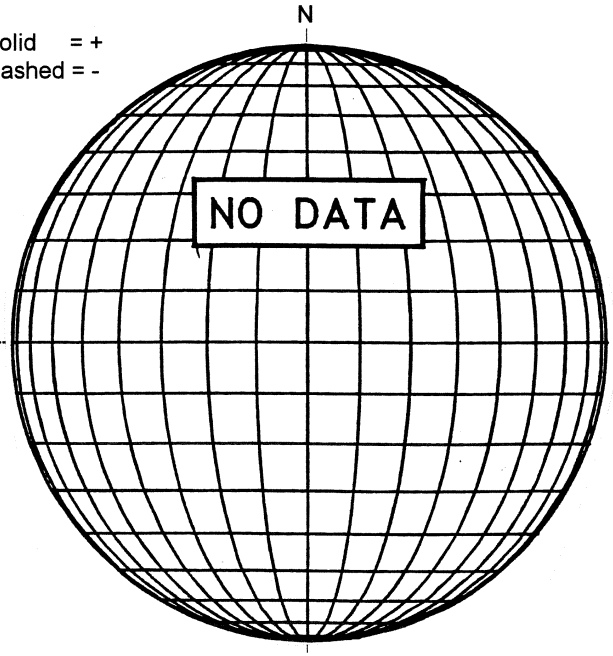

MT. WILSON MAGNETOGRAM

DeltaY = 20.1
DeltaX = 13.0

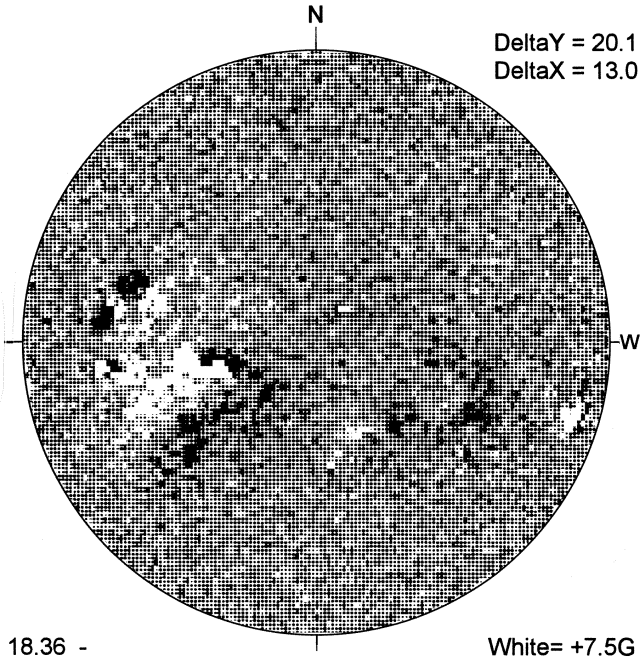

18.36 -
18.79 UT

White= +7.5G
Black = -7.5G

HUAIROU H-ALPHA

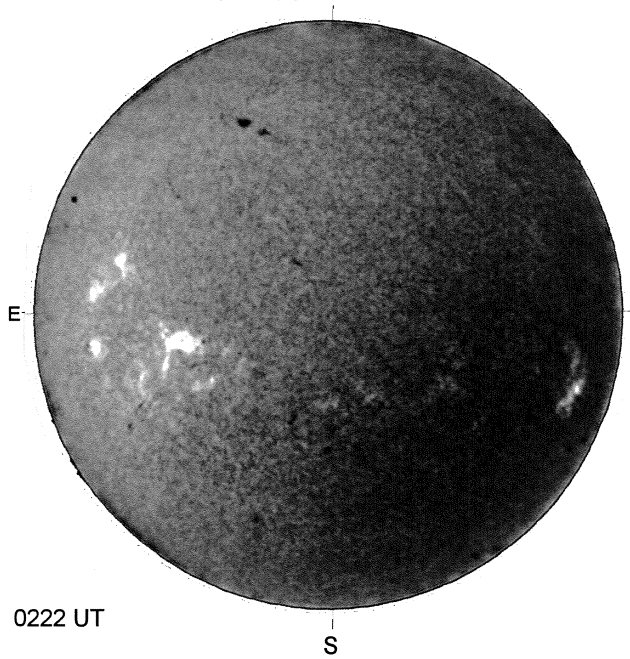

0222 UT

HOLLOMAN SUNSPOTS

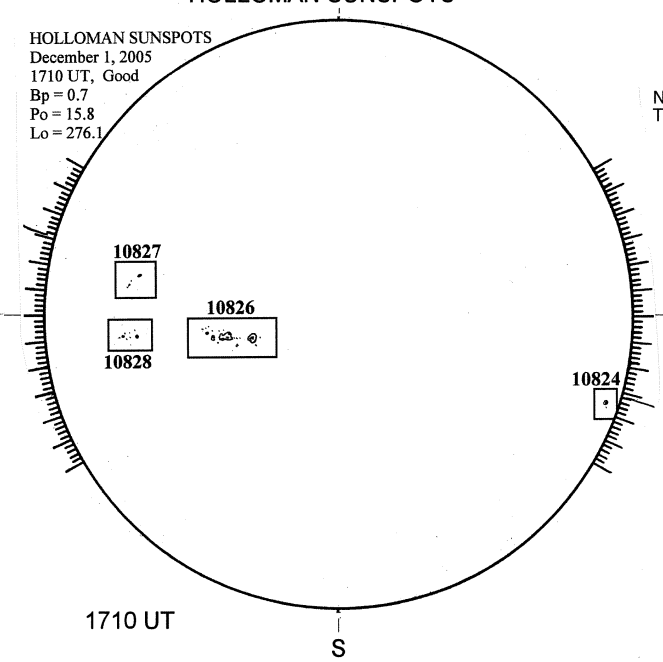

1710 UT

SACRAMENTO PEAK CORONA (1.15 Radii)----

NSO / SACRAMENTO PEAK CORONAL DATA
TICK MARKS EVERY 10 MILLIONTHS

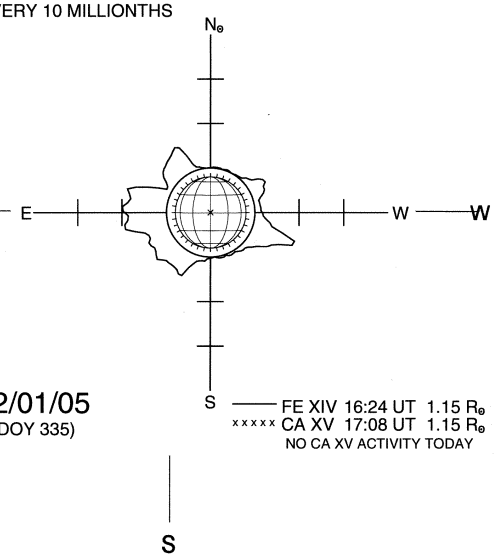

12/01/05
(DOY 335)

FE XIV 16:24 UT 1.15 R⊙
xxxxx CA XV 17:08 UT 1.15 R⊙
NO CA XV ACTIVITY TODAY