NOVEMBER 29, 2005 (P= 16.83, Bo = 1.13, Lo = 311.06)

KITT PEAK MAGNETOGRAM--SOLIS

Bright = +
Dark = -

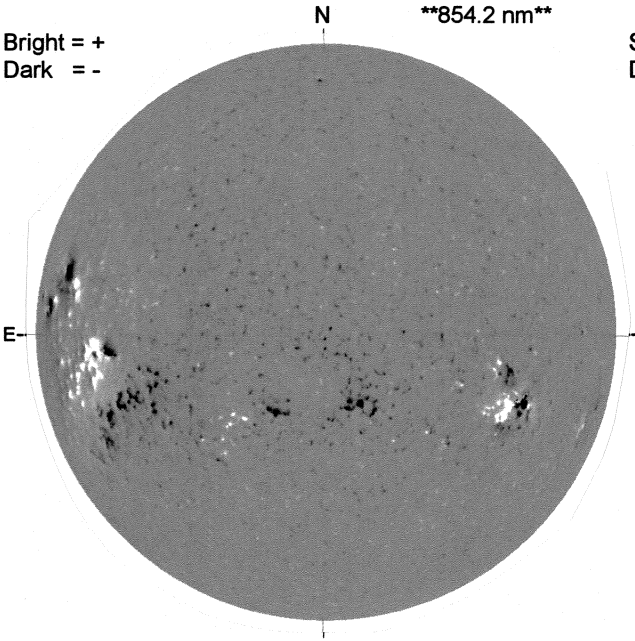

STANFORD MAGNETOGRAM

Solid = +
Dashed = -

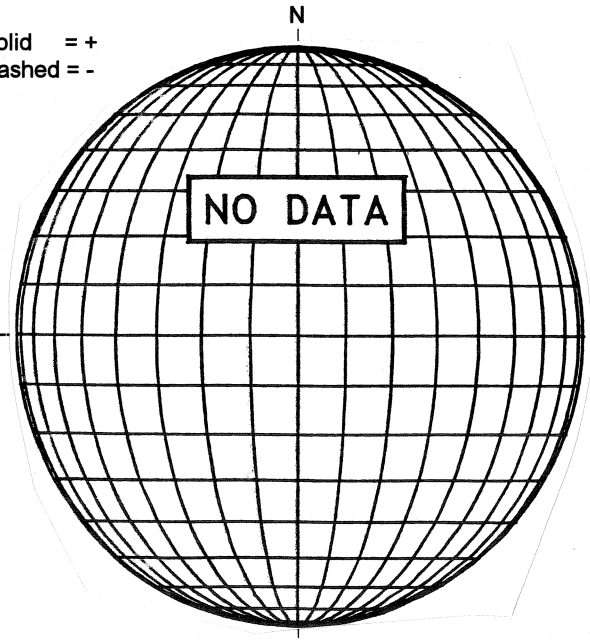

MT. WILSON MAGNETOGRAM

DeltaY = 13.1
DeltaX = 9.6

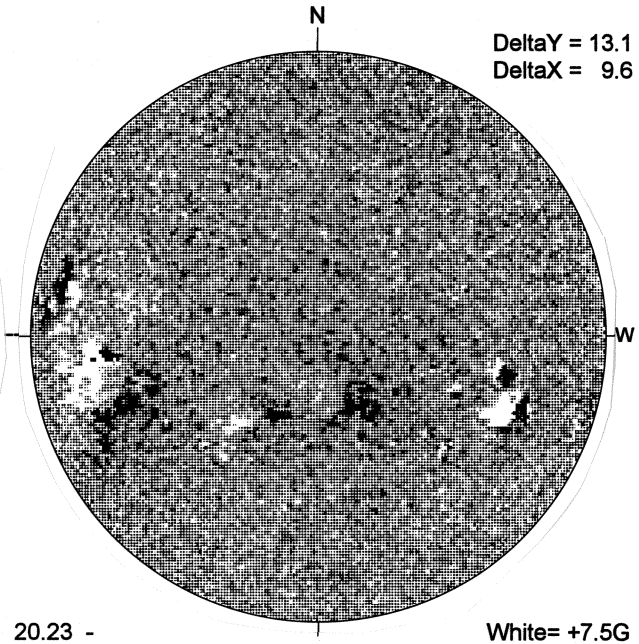

KANZELHOHE H-ALPHA

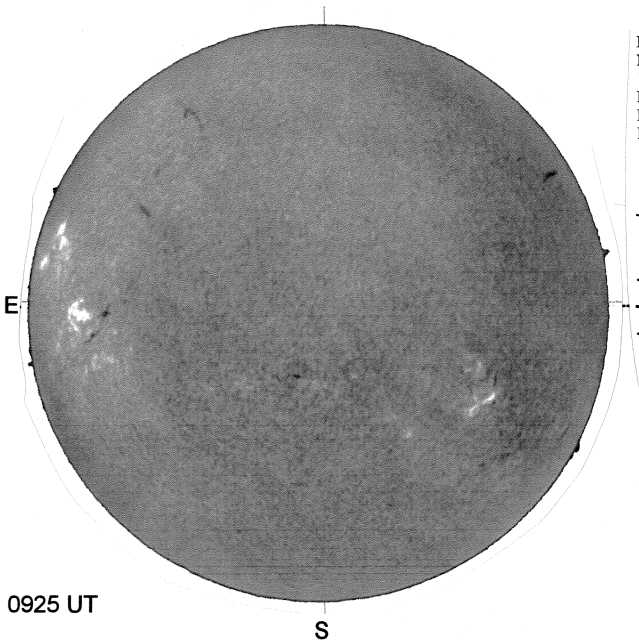

HOLLOMAN SUNSPOTS

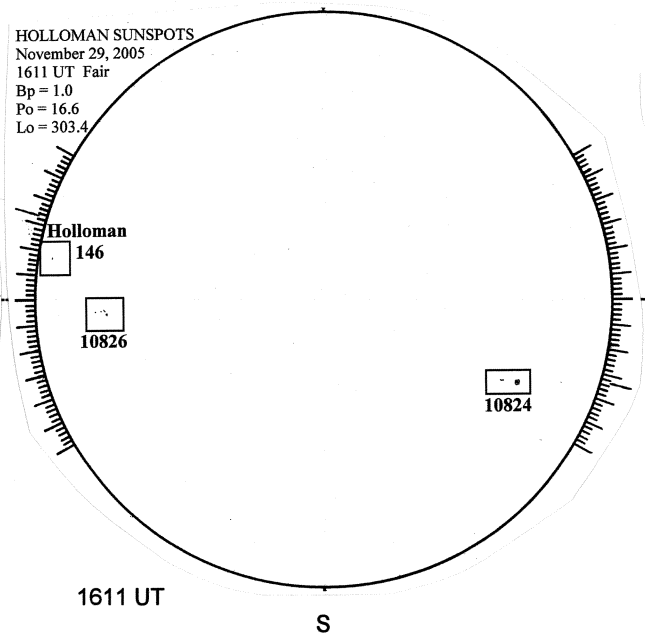
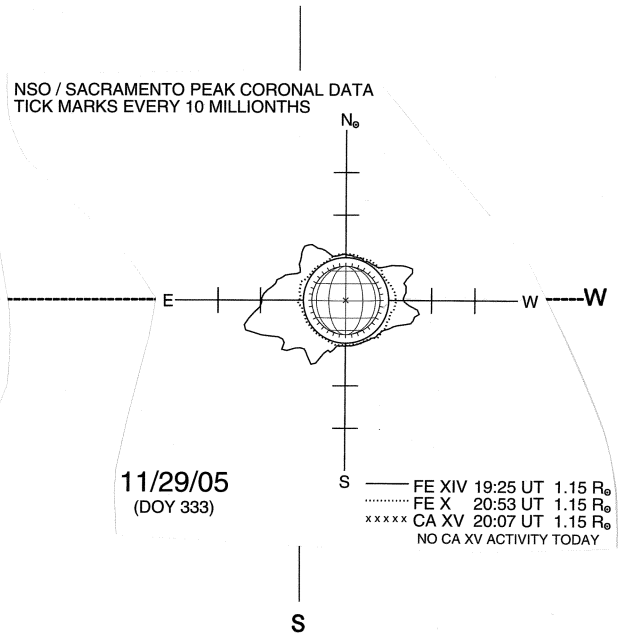
SACRAMENTO PEAK CORONA (1.15 Radii)