NOVEMBER 28, 2005 (P= 17.20, Bo = 1.25, Lo = 324.24)

KITT PEAK MAGNETOGRAM--SOLIS

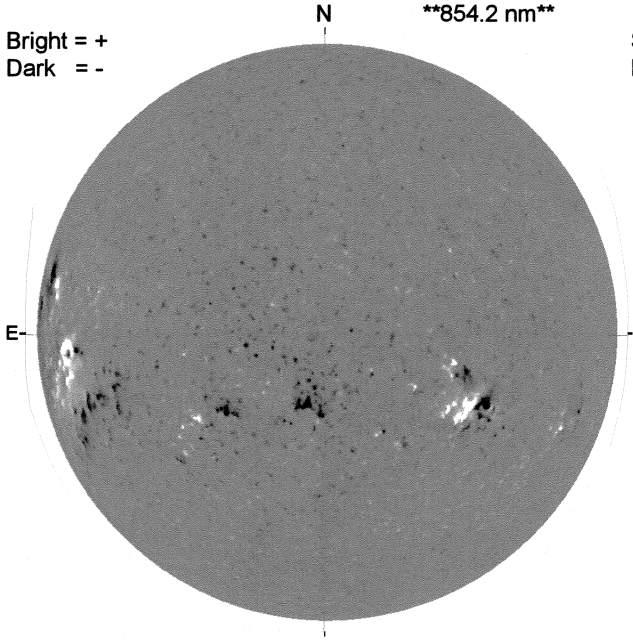

STANFORD MAGNETOGRAM

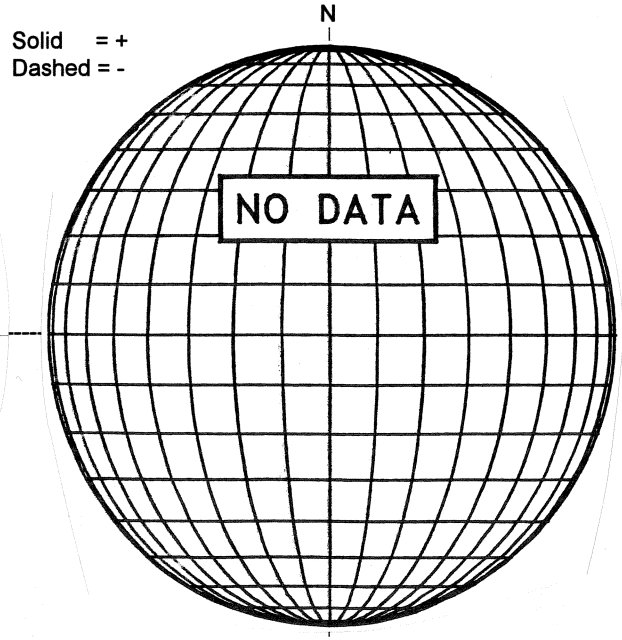

MT. WILSON MAGNETOGRAM

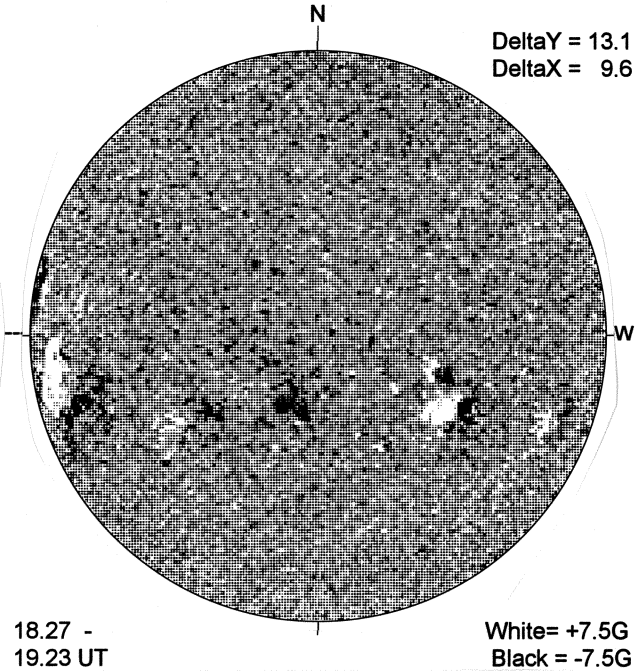

KANZELHOHE H-ALPHA

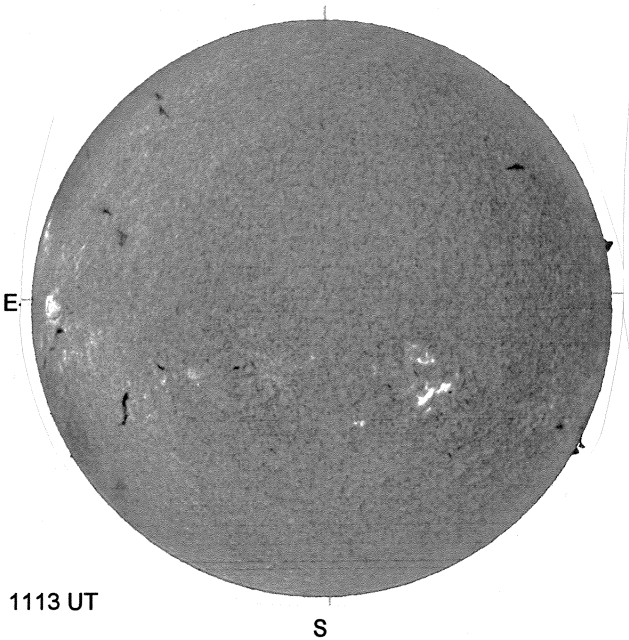

HOLLOMAN SUNSPOTS

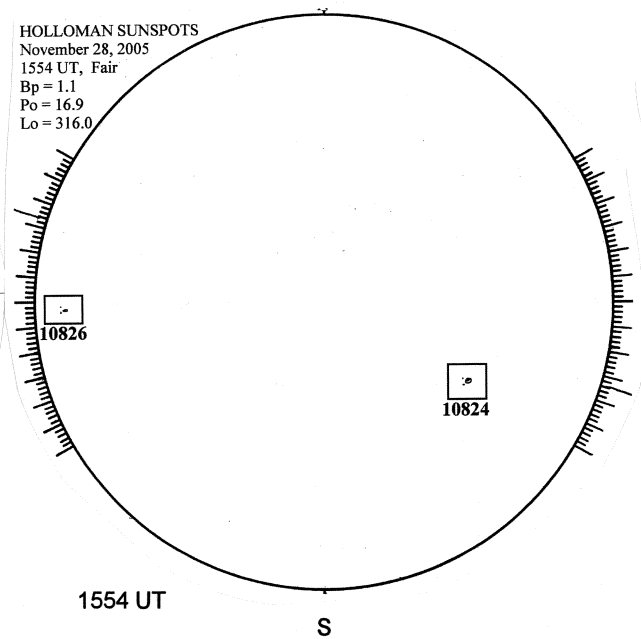

SACRAMENTO PEAK CORONA (1.15 Radii)

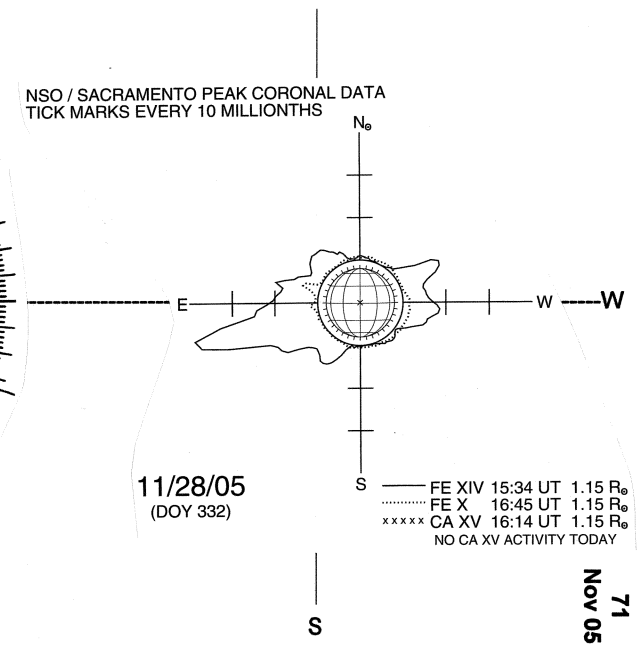

71
Nov 05