NOVEMBER 15, 2005 (P= 21.39, Bo = 2.84, Lo = 135.60)

KITT PEAK MAGNETOGRAM--SOLIS

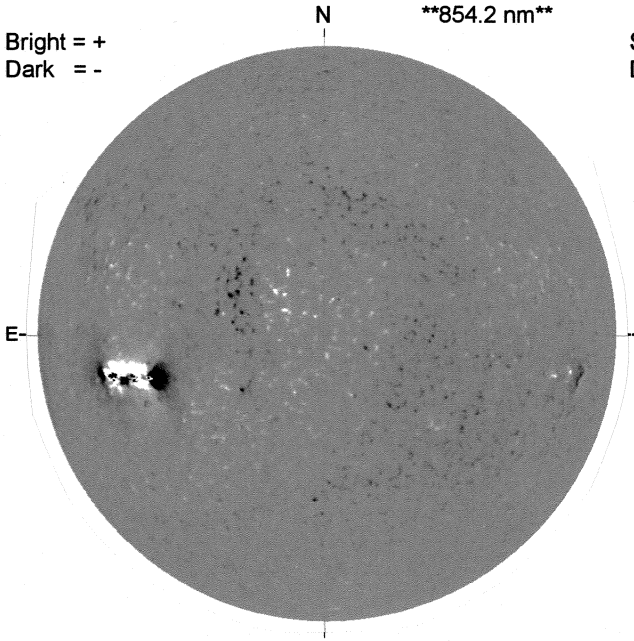

STANFORD MAGNETOGRAM

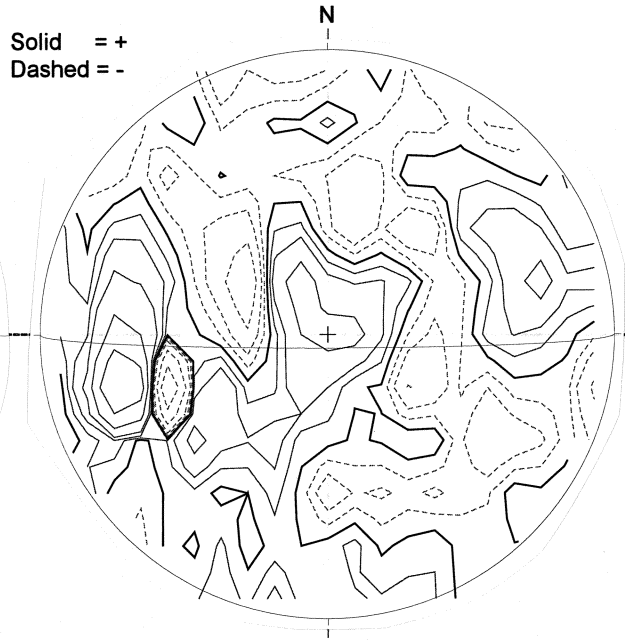

MT. WILSON MAGNETOGRAM

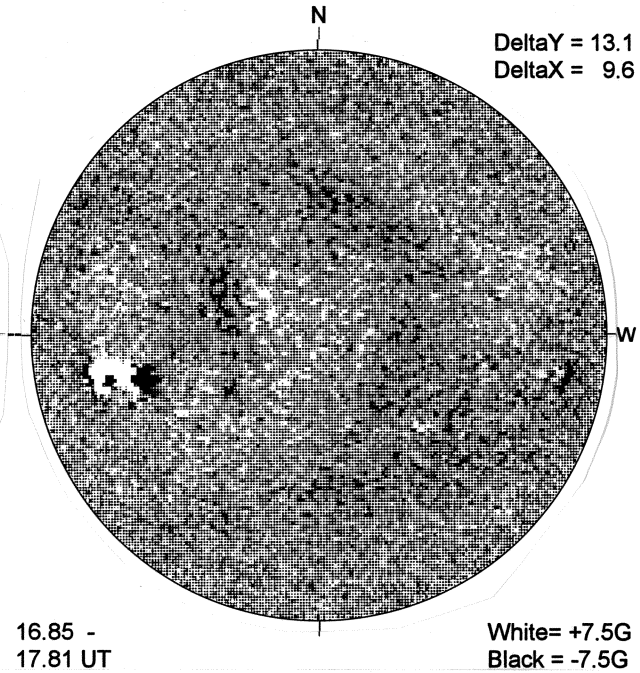

KANZELHOHE H-ALPHA

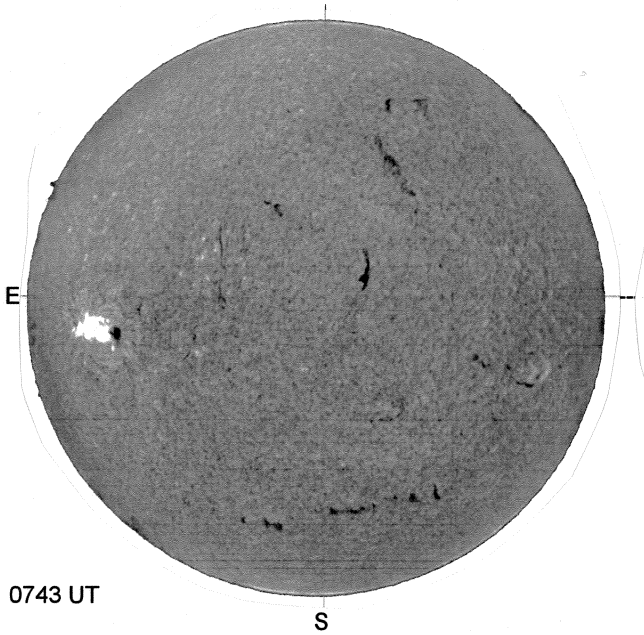

ISOON/OSPaN SUNSPOTS

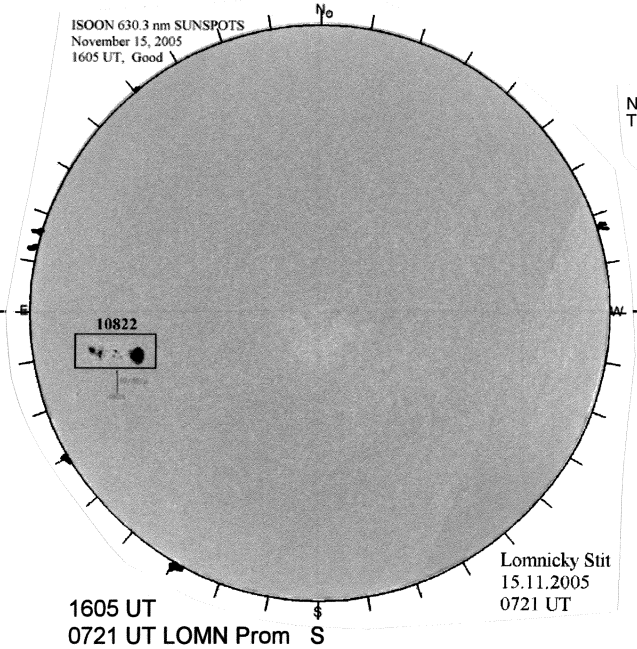
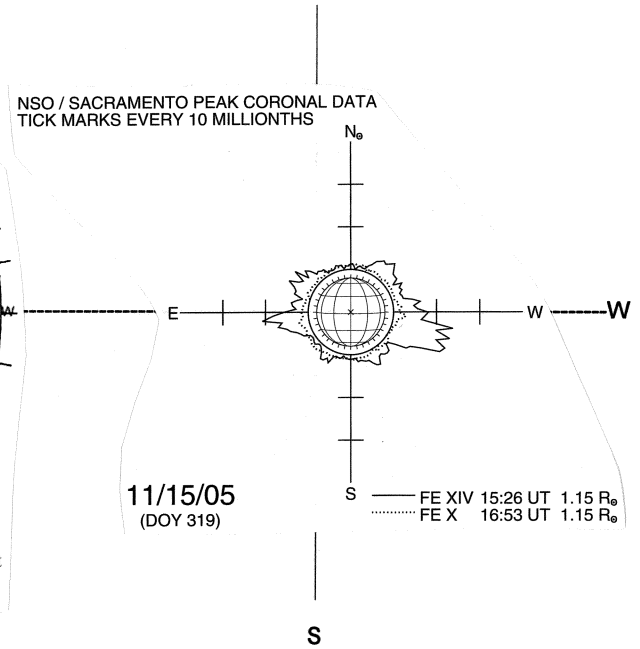
SACRAMENTO PEAK CORONA (1.15 Radii)----