NOVEMBER 14, 2005 (P= 21.66, Bo = 2.96, Lo = 148.78)

KITT PEAK MAGNETOGRAM--SOLIS

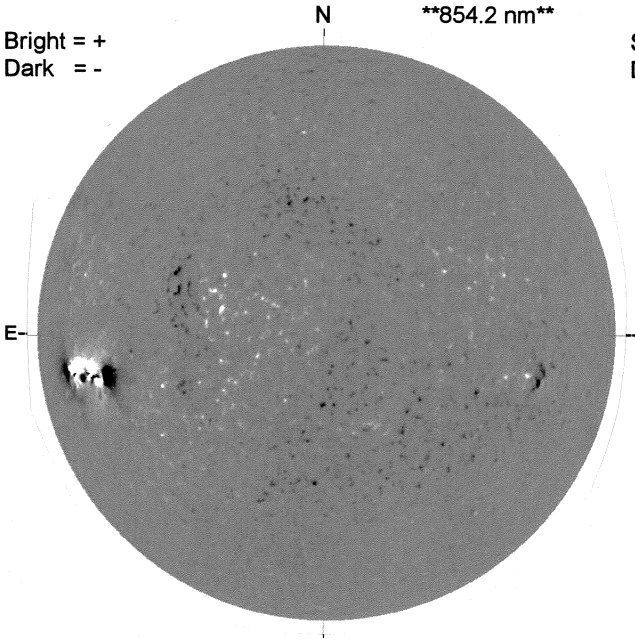

STANFORD MAGNETOGRAM

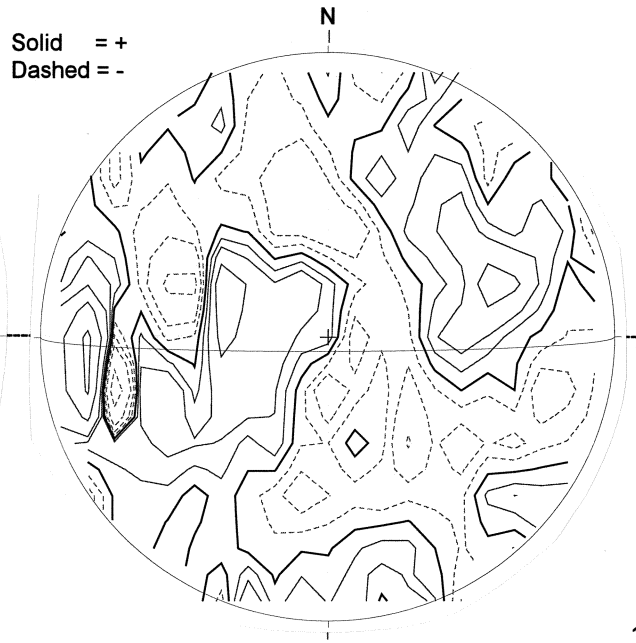

MT. WILSON MAGNETOGRAM

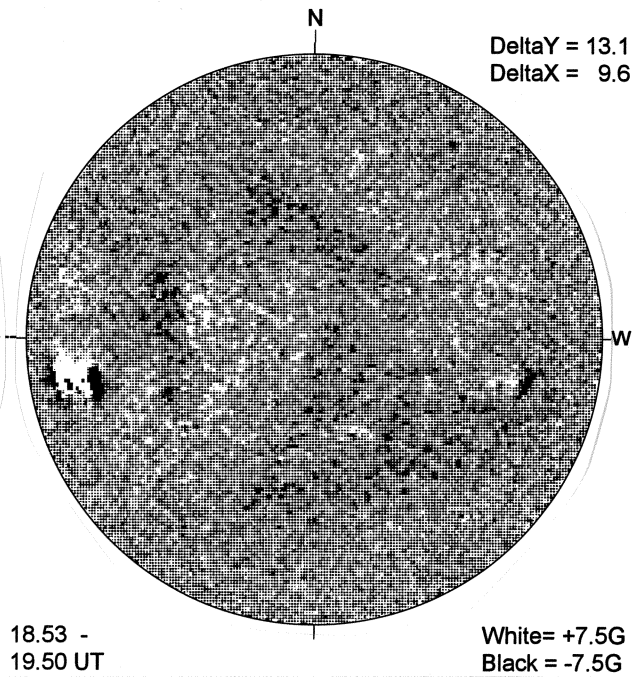

KANZELHOHE H-ALPHA

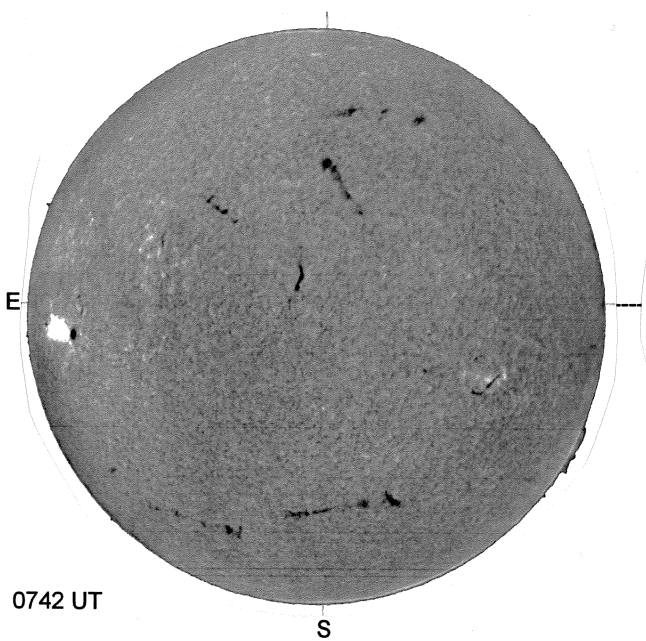

ISOON/OSPaN SUNSPOTS

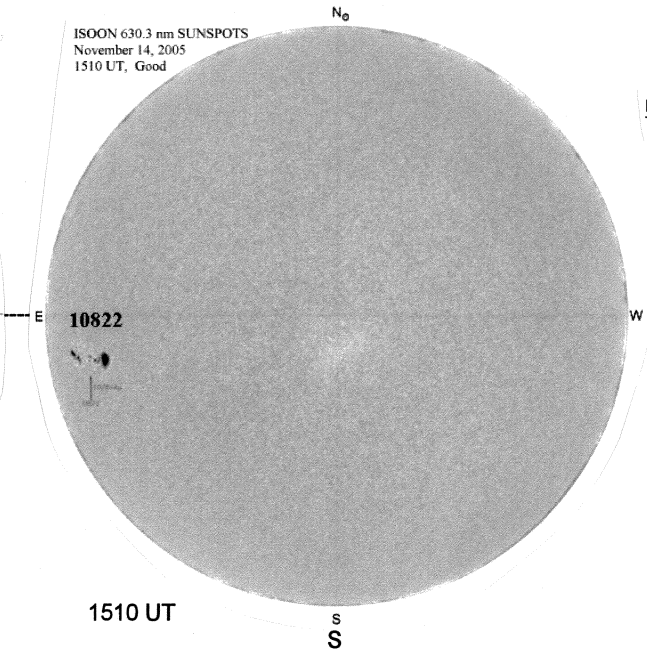
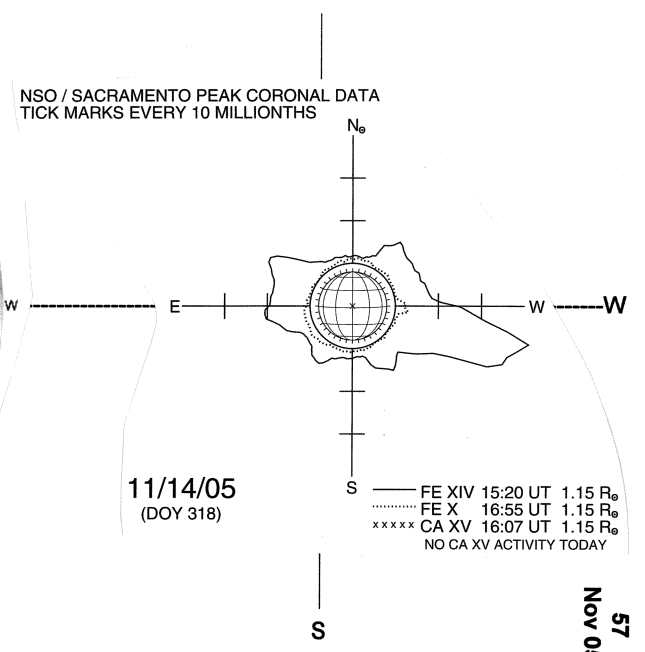
SACRAMENTO PEAK CORONA (1.15 Radii)----