**NOVEMBER 10, 2005 ( P= 22.67, Bo = 3.41 Lo = 201.52)**

KITT PEAK MAGNETOGRAM--SOLIS

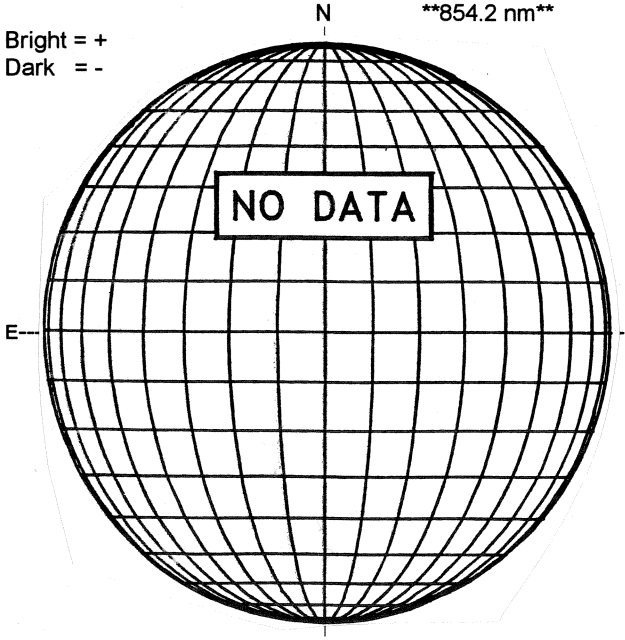


STANFORD MAGNETOGRAM

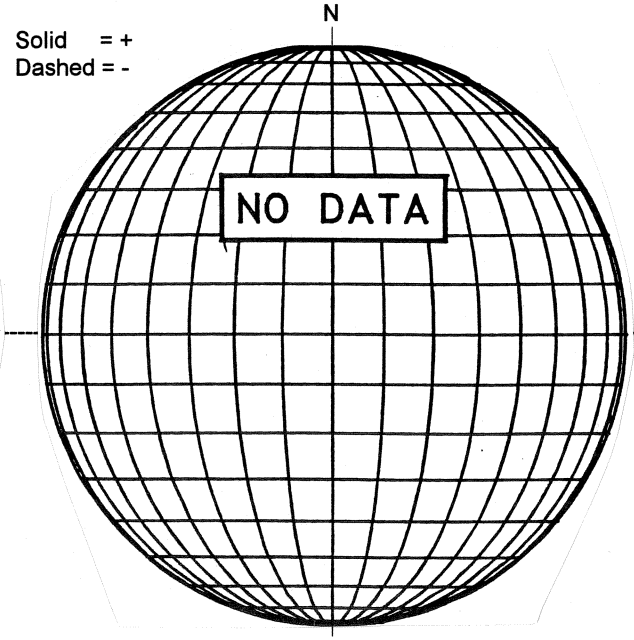


MT. WILSON MAGNETOGRAM

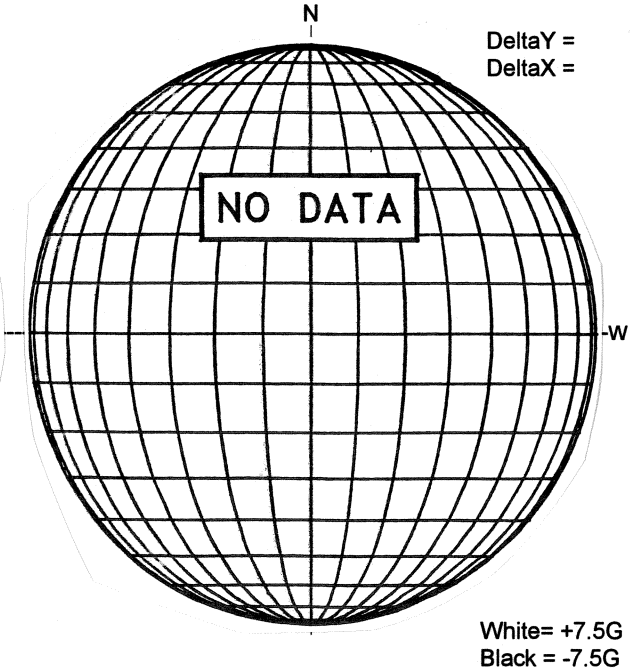


KANZELHOHE H-ALPHA

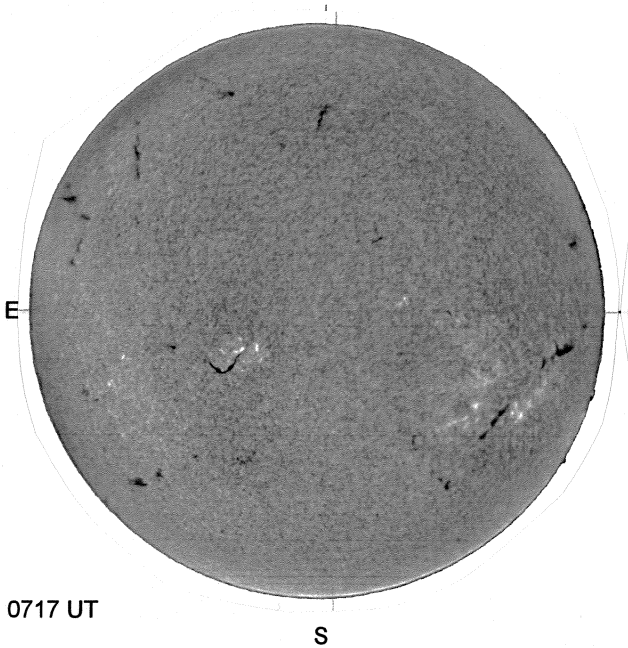


ISOON/OSPaN SUNSPOTS

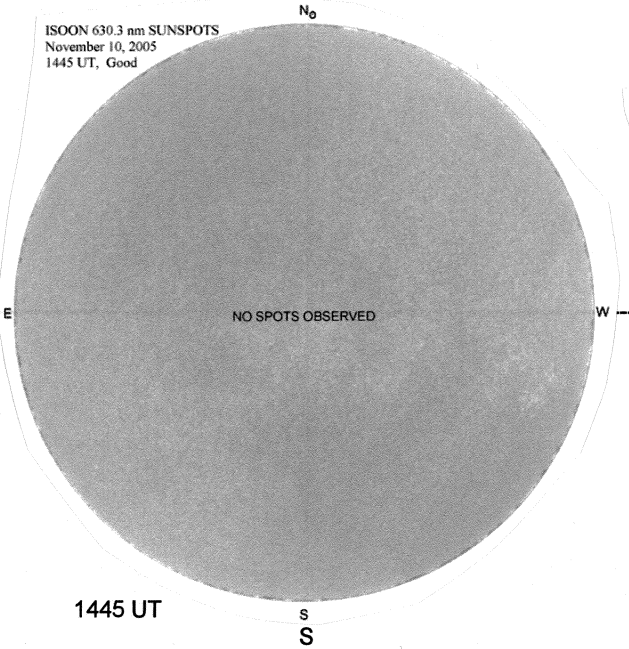

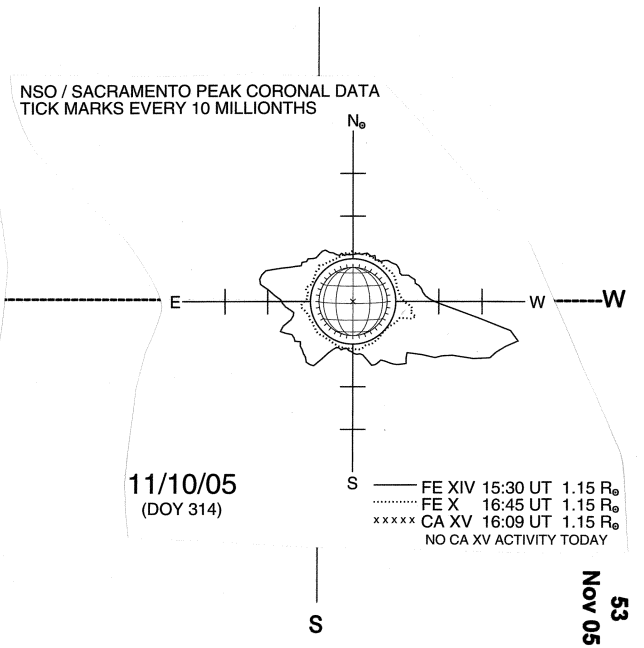
SACRAMENTO PEAK CORONA (1.15 Radii)----