OCTOBER 26, 2005 (P= 25.35, Bo = 4.95, Lo = 39.30)

KITT PEAK MAGNETOGRAM--SOLIS

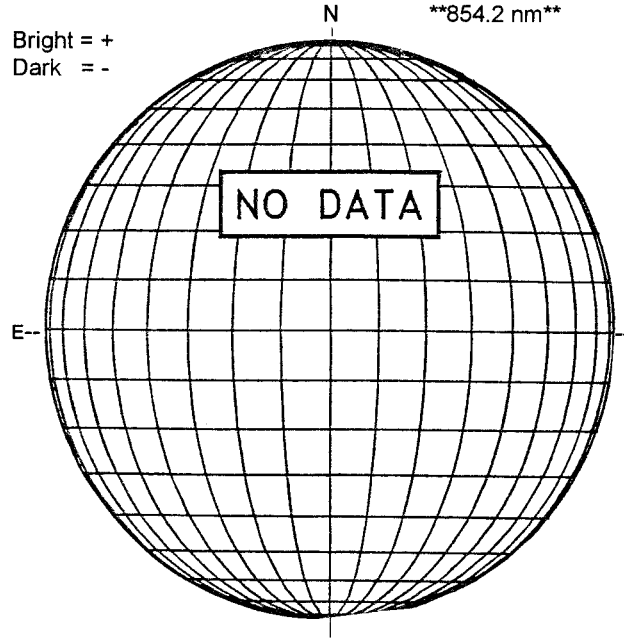

STANFORD MAGNETOGRAM

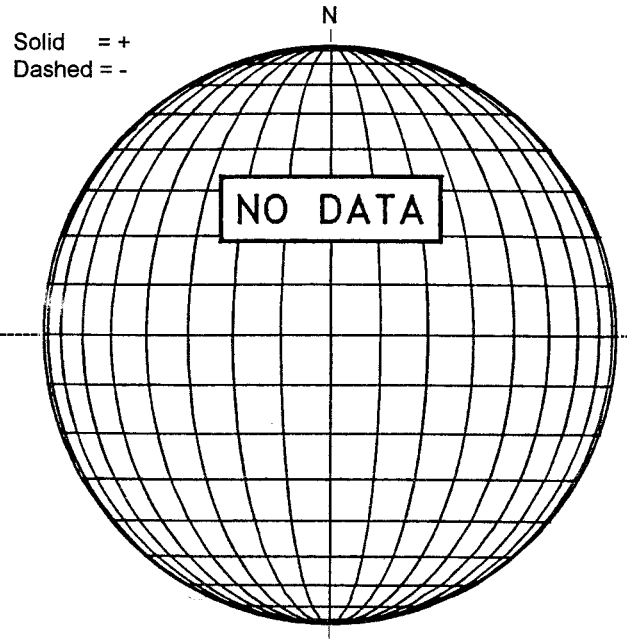

MT. WILSON MAGNETOGRAM

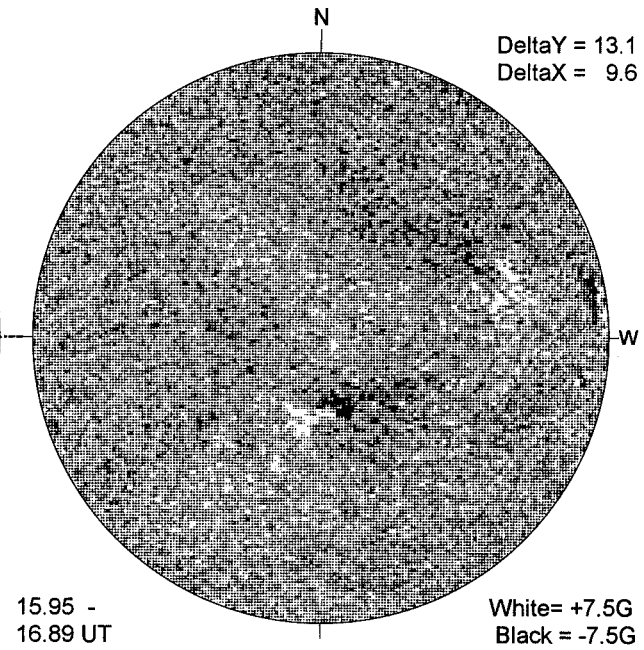

KANZELHOHE H-ALPHA

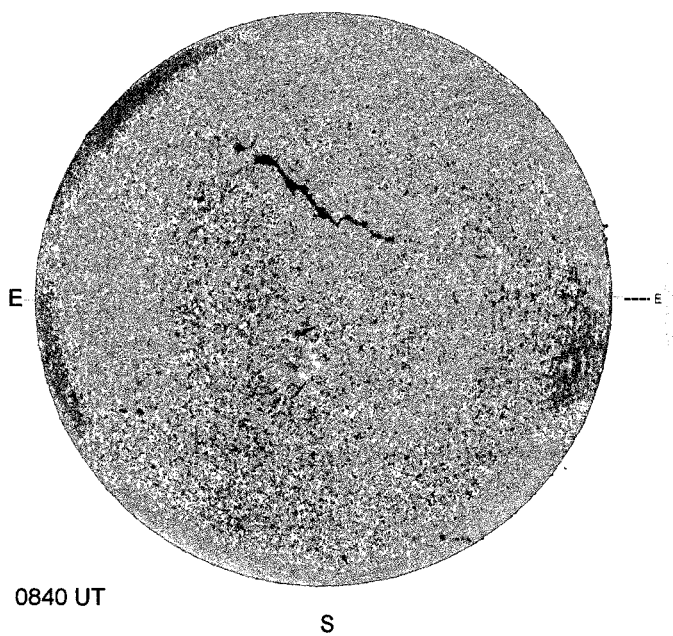

SAN VITO SUNSPOTS

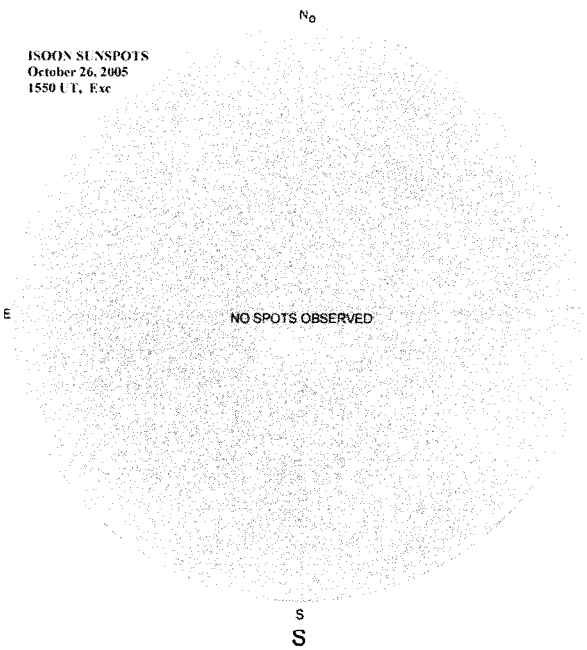
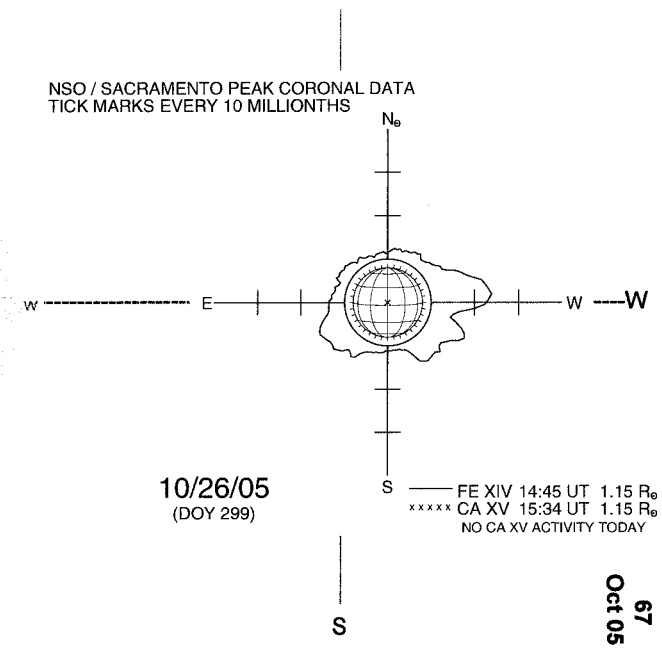
SACRAMENTO PEAK CORONA (1.15 Radii)----