OCTOBER 25, 2005 (P= 25.47, Bo = 5.05, Lo = 52.49)

KITT PEAK MAGNETOGRAM--SOLIS

854.2 nm

Bright = +
Dark = -

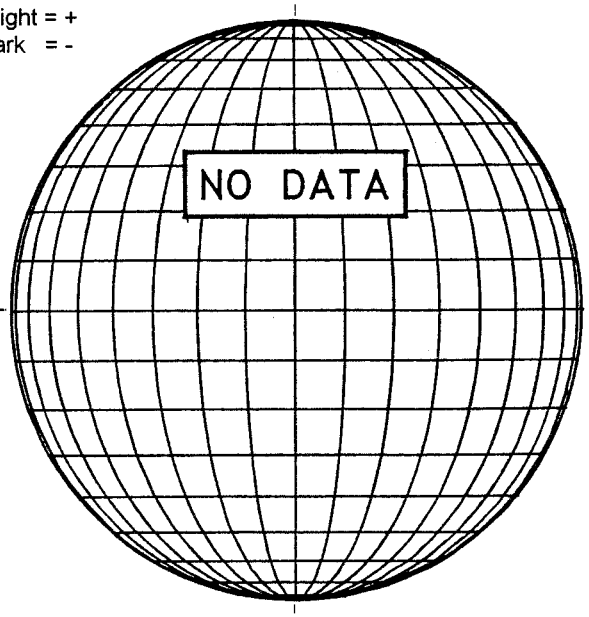

STANFORD MAGNETOGRAM

Solid = +
Dashed = -

1751 UT

MT. WILSON MAGNETOGRAM

DeltaY =
DeltaX =

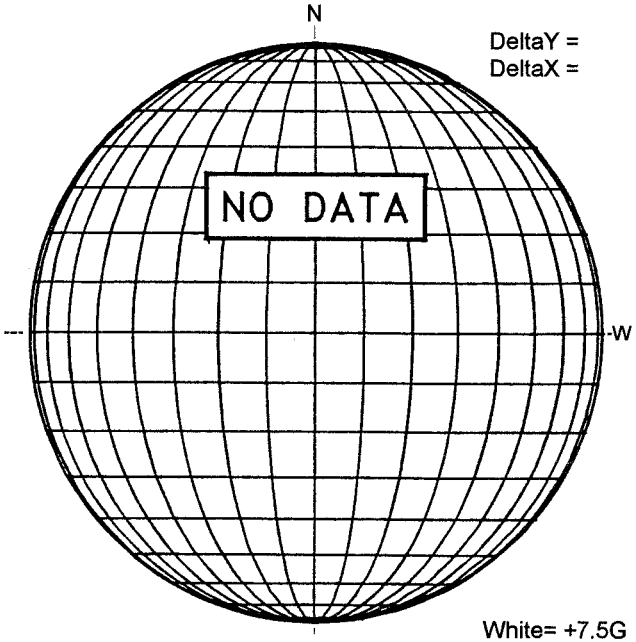

White= +7.5G
Black = -7.5G

KANZELHOHE H-ALPHA

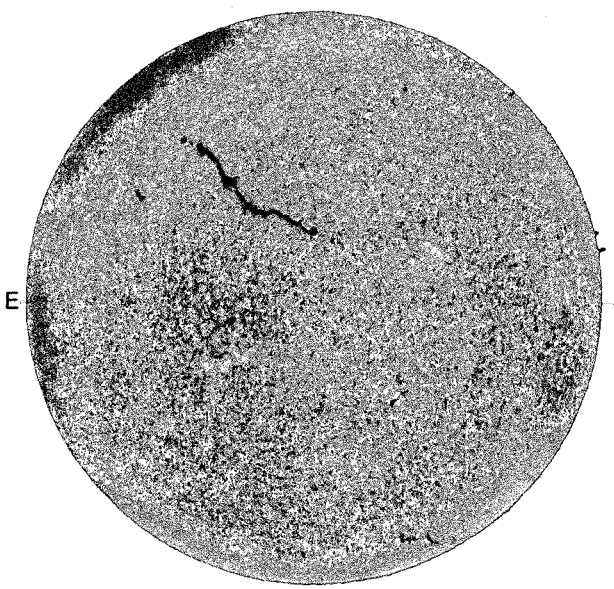

0753 UT

S

SAN VITO SUNSPOTS

S

SACRAMENTO PEAK CORONA (1.15 Radii)

NSO / SACRAMENTO PEAK CORONAL DATA
TICK MARKS EVERY 10 MILLIONTHS

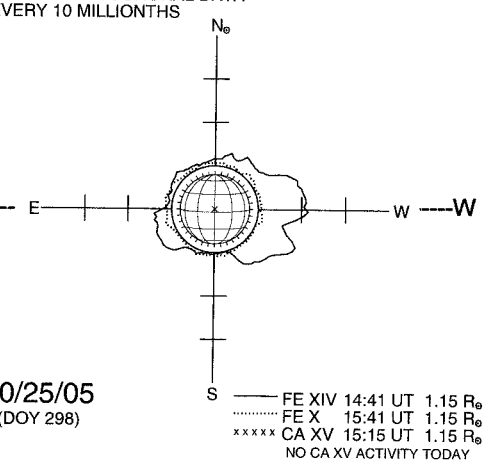

10/25/05
(DOY 298)

FE XIV 14:41 UT 1.15 R⊙
FE X 15:41 UT 1.15 R⊙
xxxxx CA XV 15:15 UT 1.15 R⊙
NO CA XV ACTIVITY TODAY

S