OCTOBER 24, 2005 (P= 25.58, Bo = 5.14, Lo = 65.68)

KITT PEAK MAGNETOGRAM--SOLIS

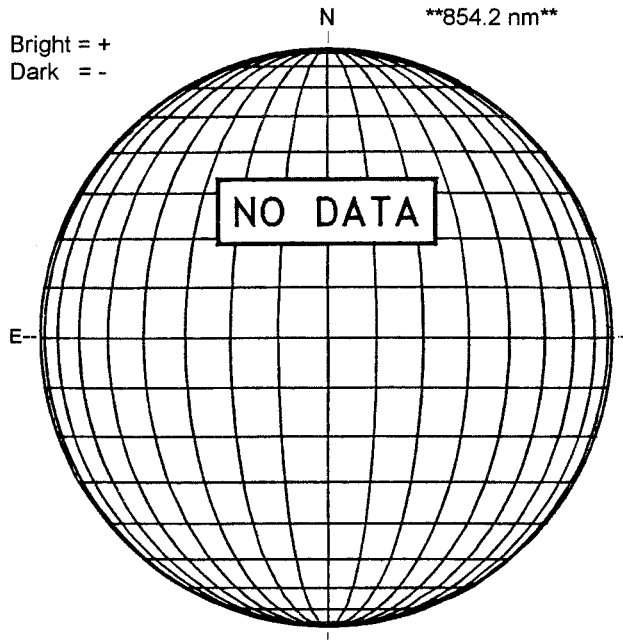

STANFORD MAGNETOGRAM

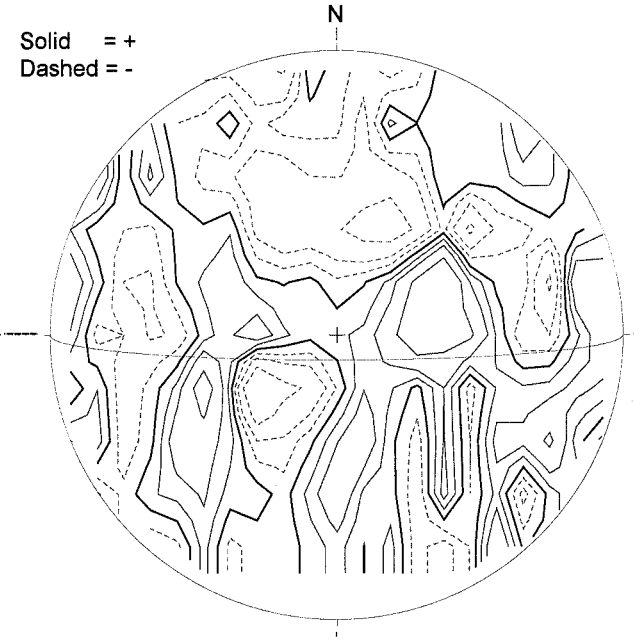

MT. WILSON MAGNETOGRAM

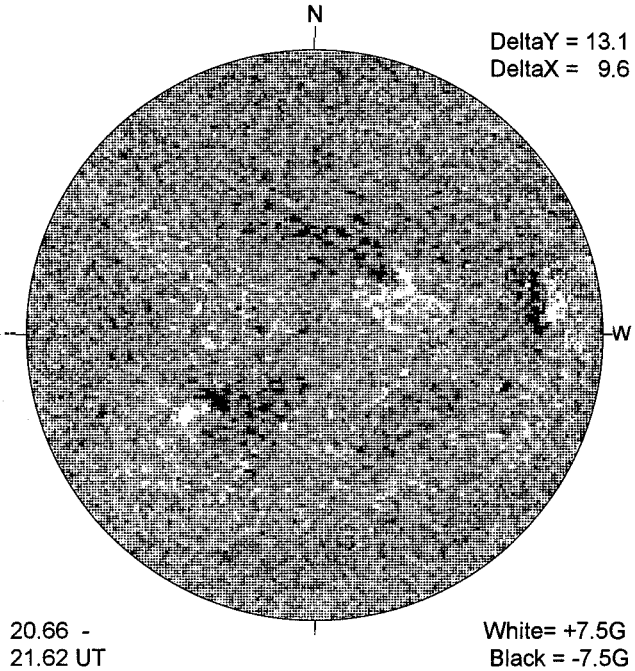

BIG BEAR H-ALPHA

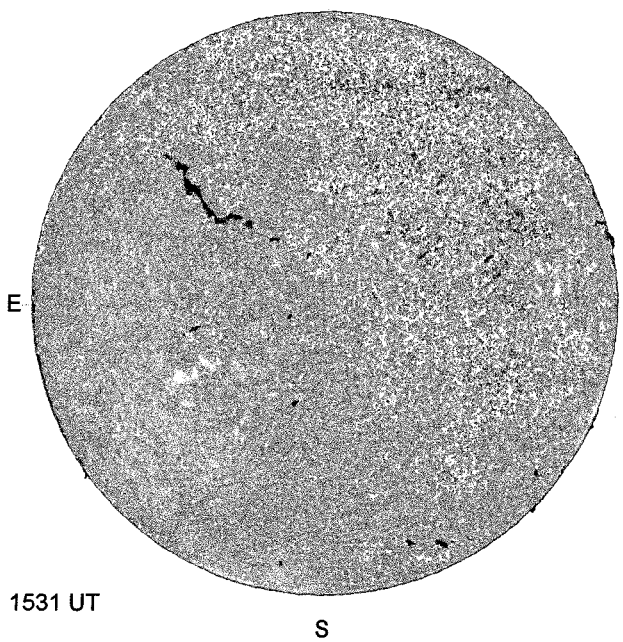

SAN VITO SUNSPOTS

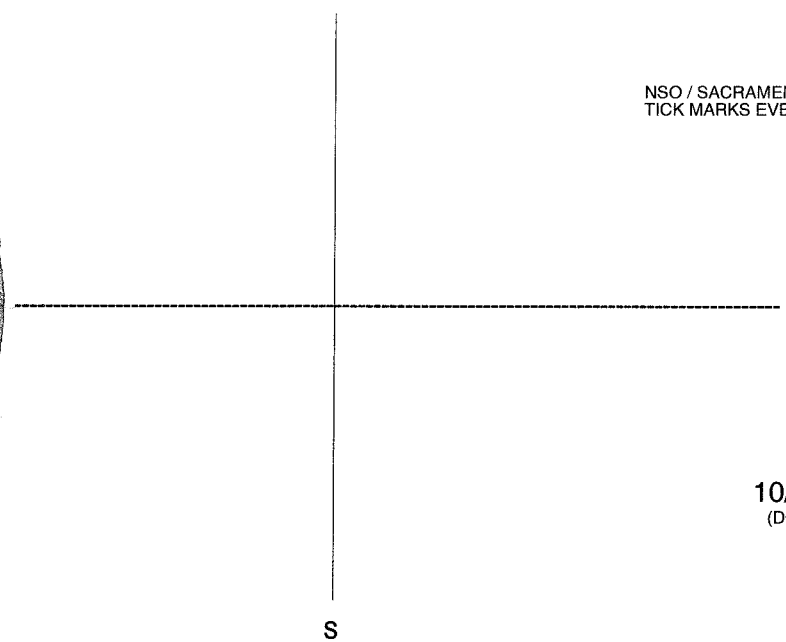

SACRAMENTO PEAK CORONA (1.15 Radii)----

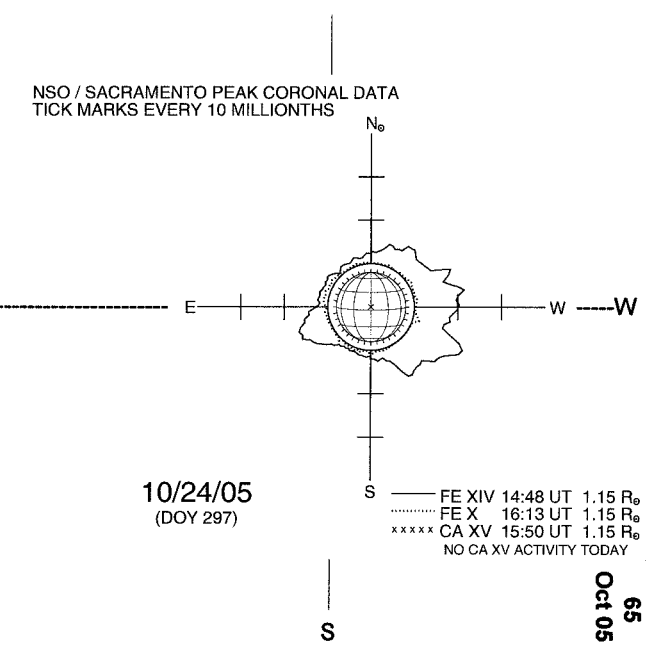

65
Oct 05