**OCTOBER 18, 2005 ( P= 26.06, Bo = 5.64, Lo = 144.81)**

KITT PEAK MAGNETOGRAM--SOLIS

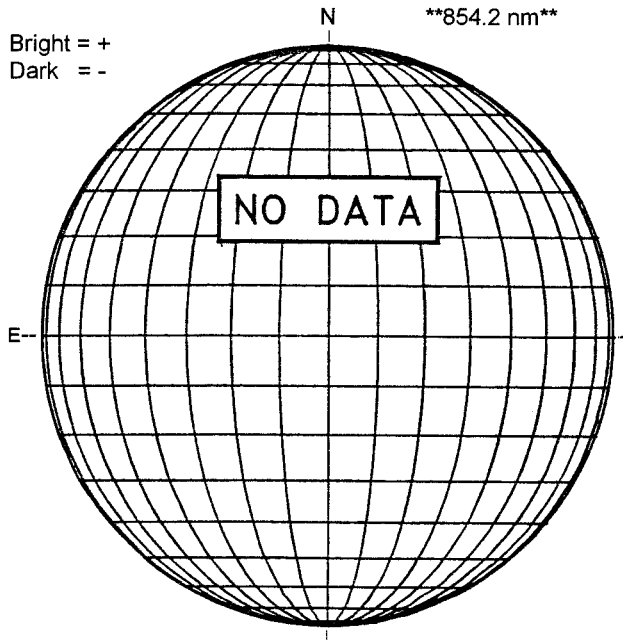


STANFORD MAGNETOGRAM

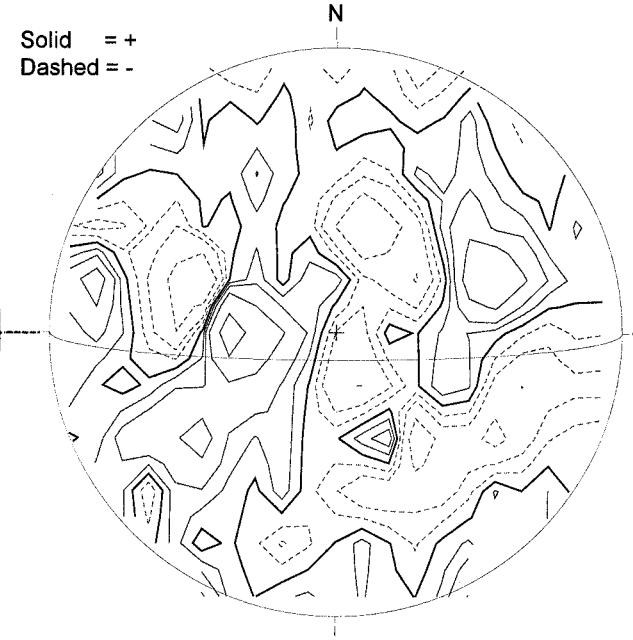


MT. WILSON MAGNETOGRAM

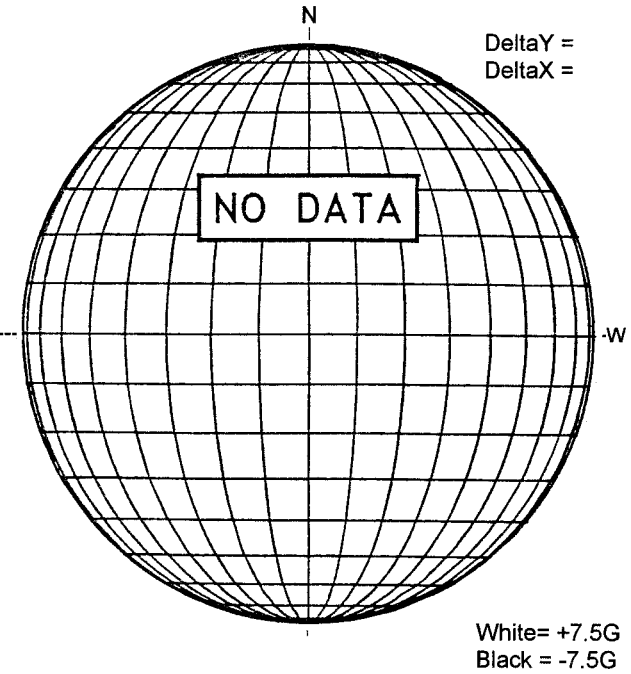


---- KANZELHOHE H-ALPHA

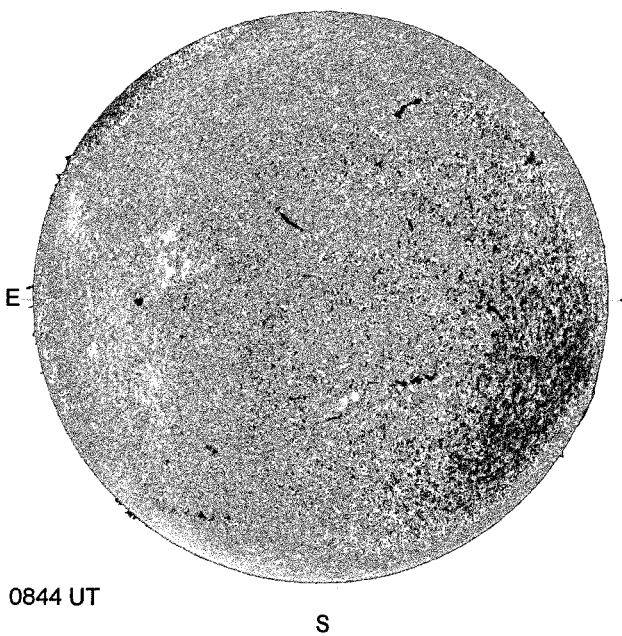


HOLLOMAN SUNSPOTS

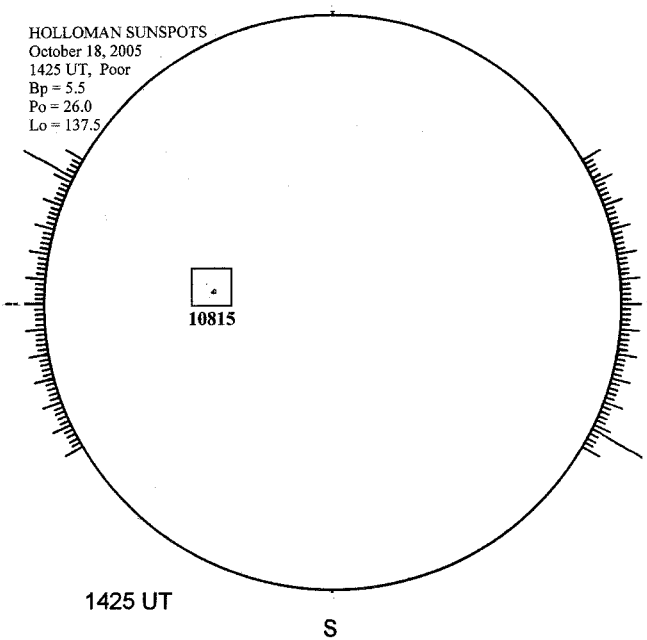

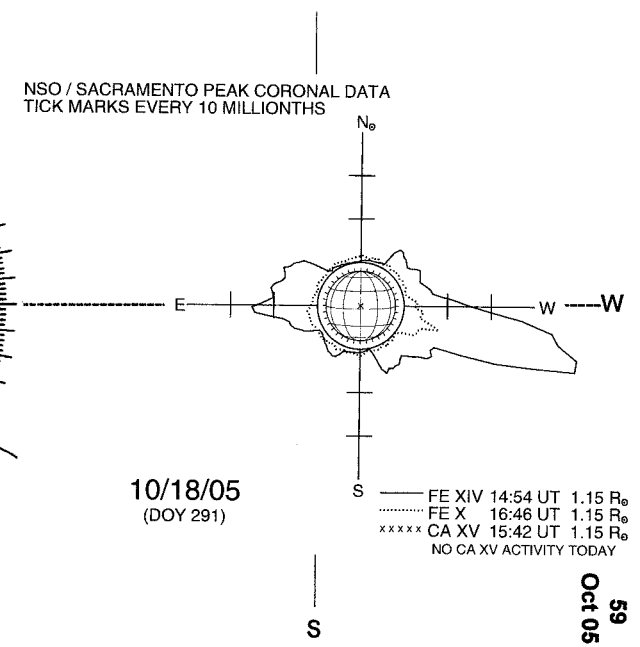
SACRAMENTO PEAK CORONA (1.15 Radii)----