OCTOBER 5, 2005 (P= 26.19, Bo = 6.51, Lo = 316.31)

KITT PEAK MAGNETOGRAM--SOLIS

N **854.2 nm**

Bright = +
Dark = -

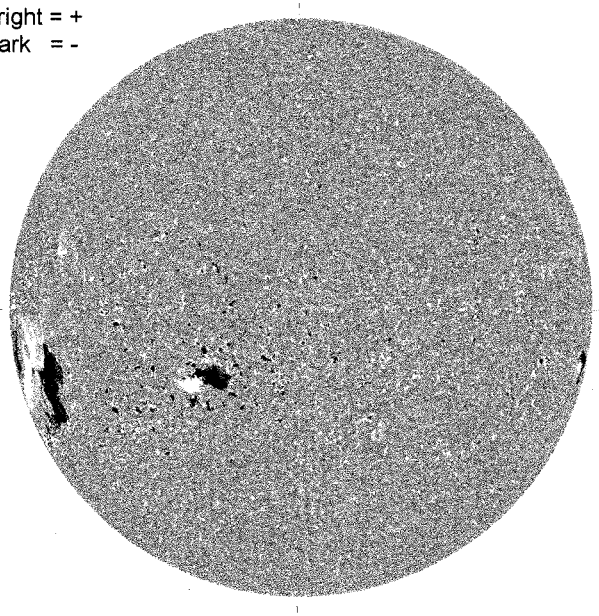

E-

1648 UT

STANFORD MAGNETOGRAM

N

Solid = +
Dashed = -

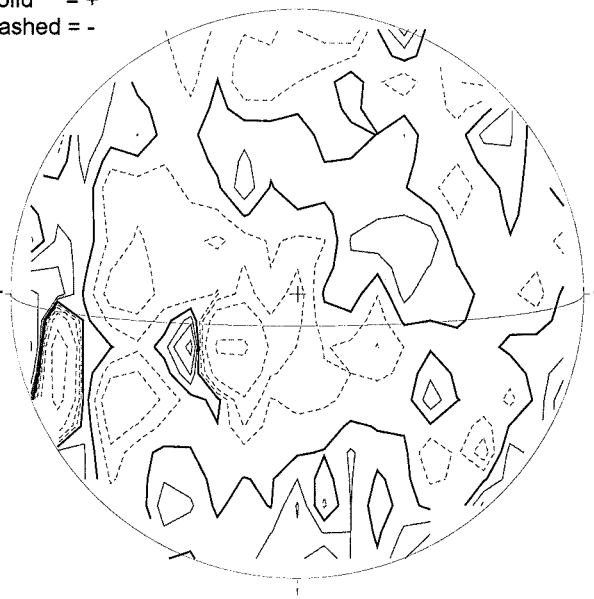

2107 UT

MT. WILSON MAGNETOGRAM

N

DeltaY = 13.1
DeltaX = 9.6

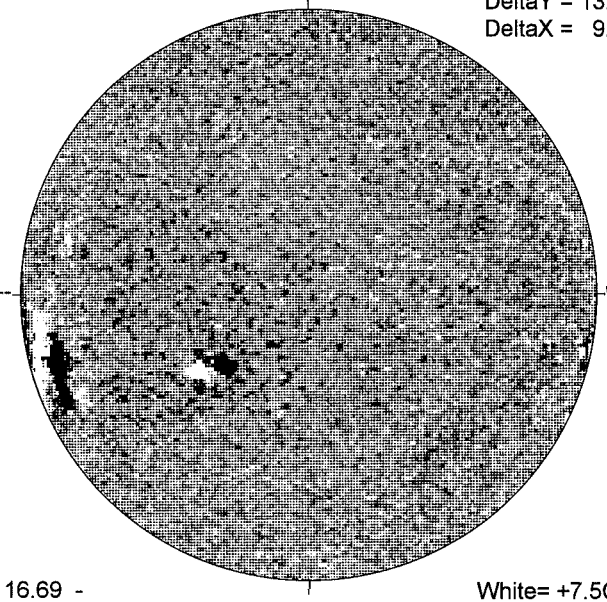

-W

16.69 -
17.64 UT

White= +7.5G
Black = -7.5G

BIG BEAR H-ALPHA

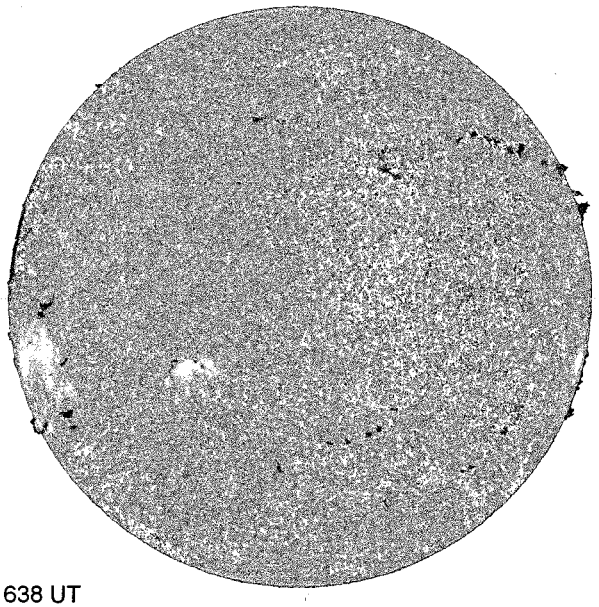

E

1638 UT

S

HOLLOMAN SUNSPOTS

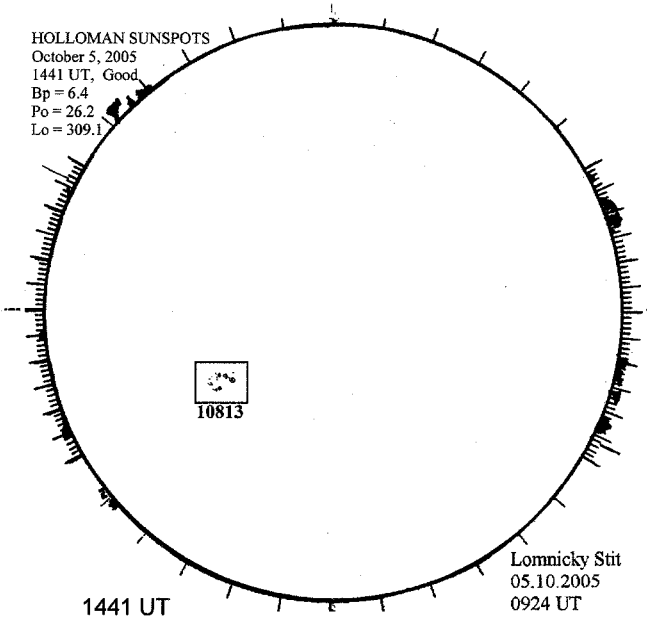

1441 UT
0924 UT LOMN Prom S

SACRAMENTO PEAK CORONA (1.15 Radii)

NSO / SACRAMENTO PEAK CORONAL DATA
TICK MARKS EVERY 10 MILLIONTHS

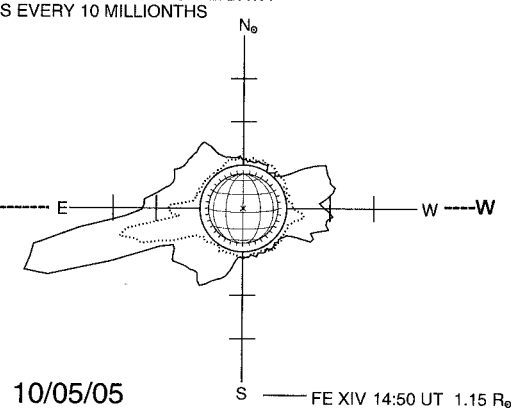

10/05/05
(DOY 278)

FE XIV 14:50 UT 1.15 R⊙
FE X 16:46 UT 1.15 R⊙
xxxxx CA XV 15:30 UT 1.15 R⊙
NO CA XV ACTIVITY TODAY

S