SEPTEMBER 30, 2005 (P= 25.91, Bo = 6.76, Lo = 22.28)

KITT PEAK MAGNETOGRAM—SOLIS

N **854.2 nm**

Bright = +
Dark = -

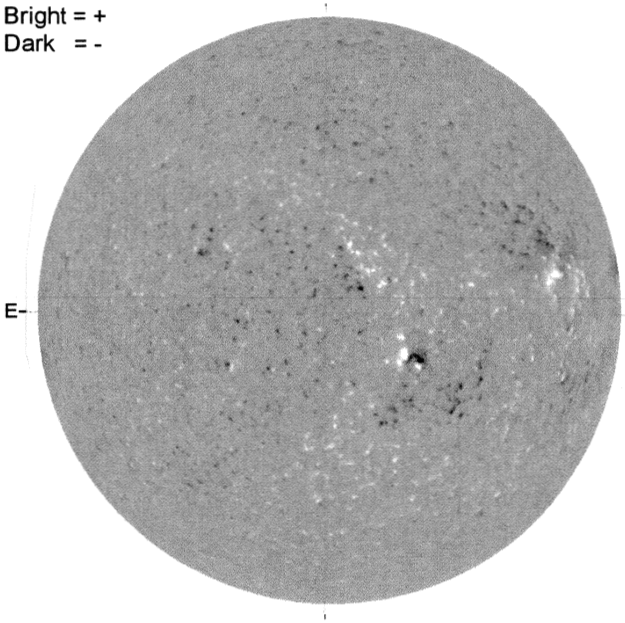

E-

1549 UT

STANFORD MAGNETOGRAM

N

Solid = +
Dashed = -

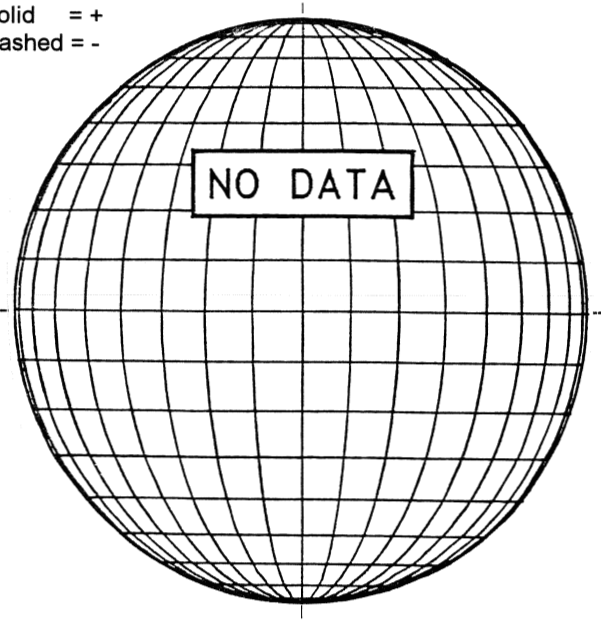

MT. WILSON MAGNETOGRAM

N

DeltaY = 13.1
DeltaX = 9.6

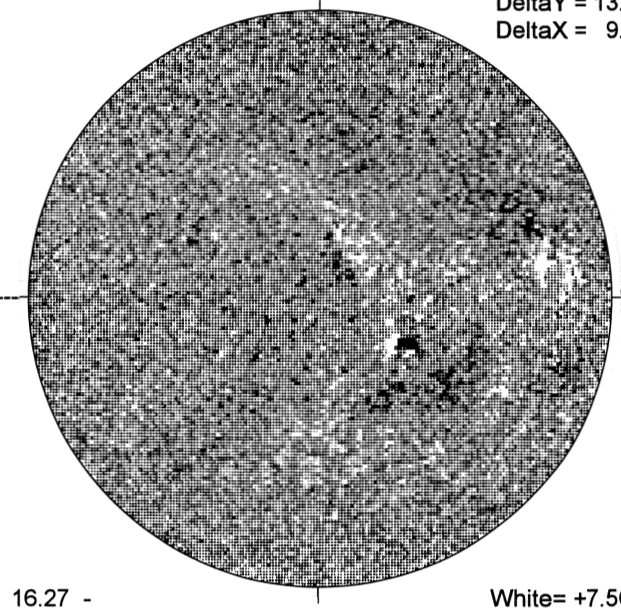

-W

16.27 -
17.21 UT

White= +7.5G
Black = -7.5G

BIG BEAR H-ALPHA

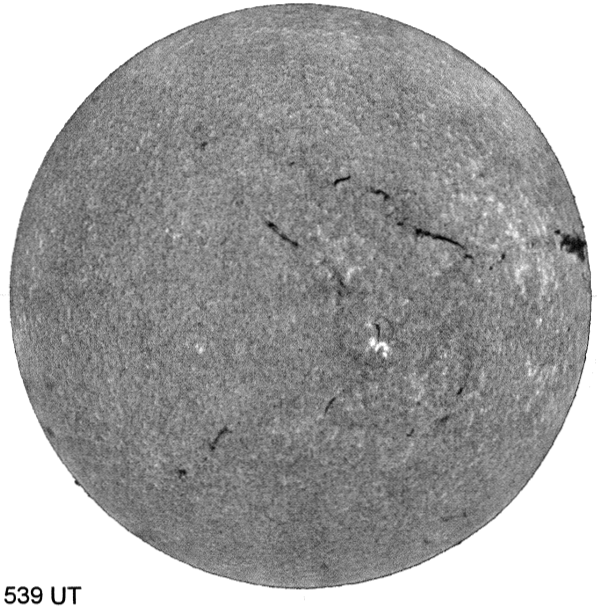

E

1539 UT

S

HOLLOMAN SUNSPOTS

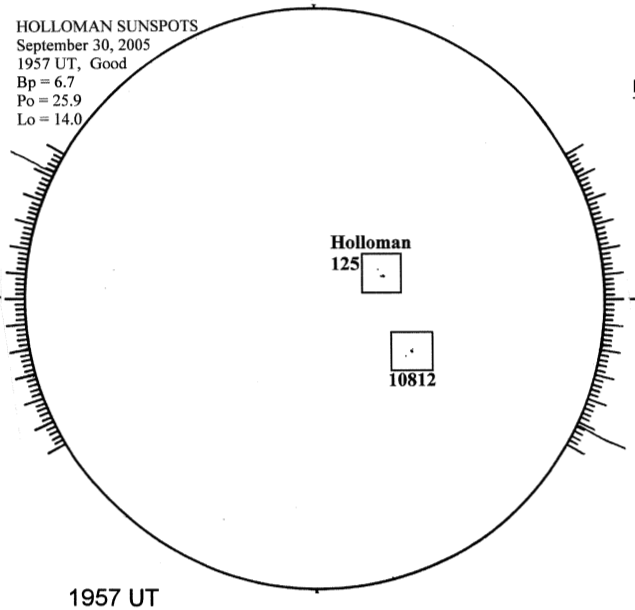

1957 UT

S

SACRAMENTO PEAK CORONA (1.15 Radii)----

NSO / SACRAMENTO PEAK CORONAL DATA
TICK MARKS EVERY 10 MILLIONTHS

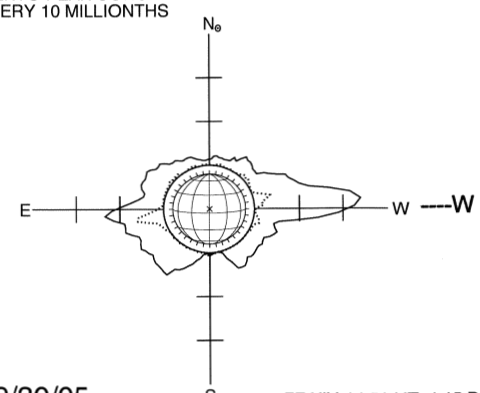

09/30/05
(DOY 273)

—— FE XIV 14:56 UT 1.15 R⊙
····· FE X 17:55 UT 1.15 R⊙
xxxxx CA XV 15:52 UT 1.15 R⊙
NO CA XV ACTIVITY TODAY

S