SEPTEMBER 28, 2005 (P= 25.75, Bo = 6.85, Lo = 48.68)

KITT PEAK MAGNETOGRAM--SOLIS

N **854.2 nm**

Bright = +
Dark = -

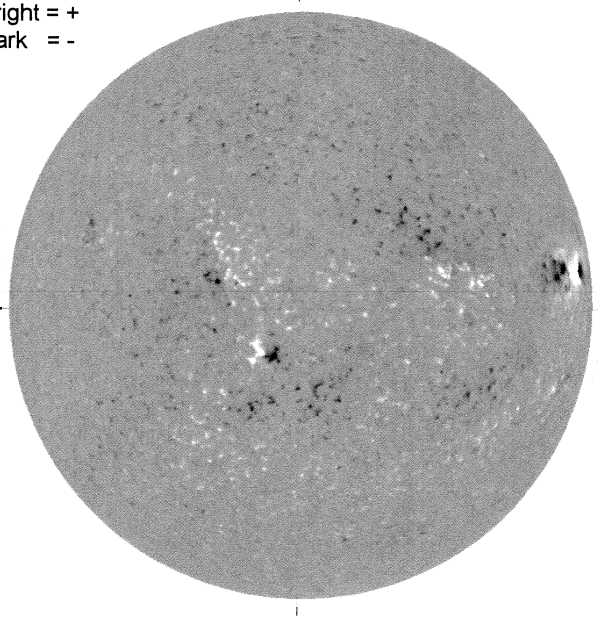

E--

2202 UT

STANFORD MAGNETOGRAM

N

Solid = +
Dashed = -

2224 UT

MT. WILSON MAGNETOGRAM

N

DeltaY = 13.1
DeltaX = 9.6

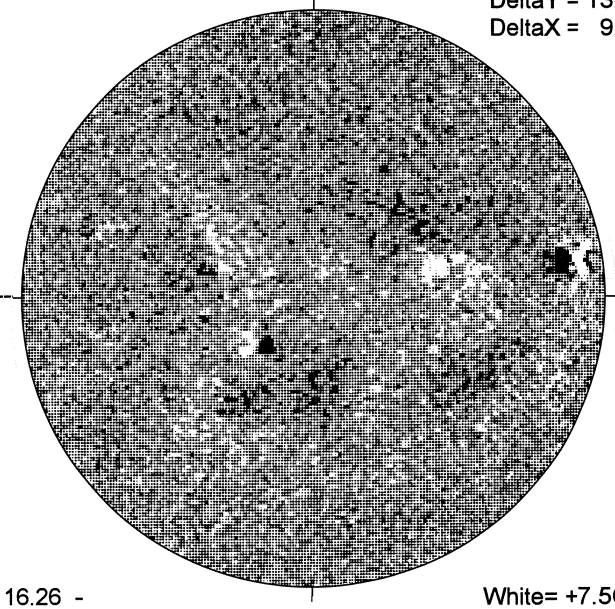

-W

16.26 -
17.21 UT

White= +7.5G
Black = -7.5G

BIE BEAR H-ALPHA

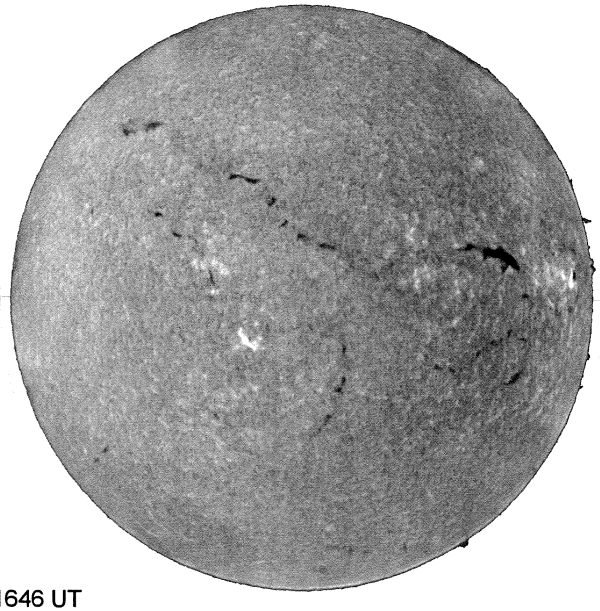

E

1646 UT

S

HOLLOMAN SUNSPOTS

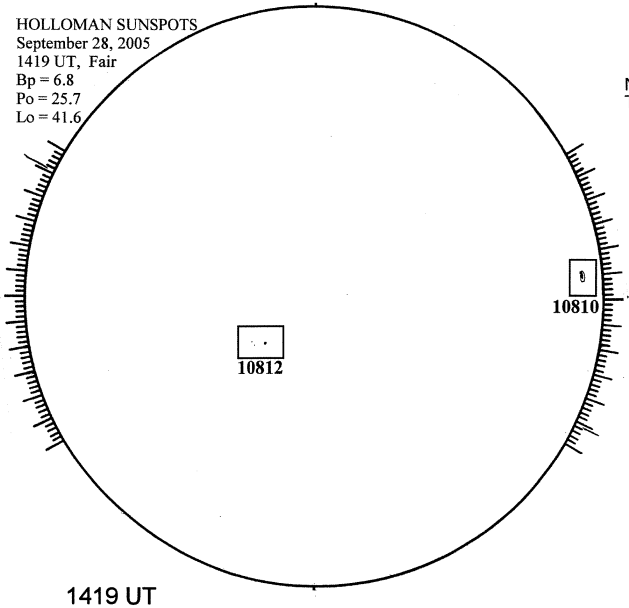

1419 UT

S

SACRAMENTO PEAK CORONA (1.15 Radii)----

NSO / SACRAMENTO PEAK CORONAL DATA
TICK MARKS EVERY 10 MILLIONTHS

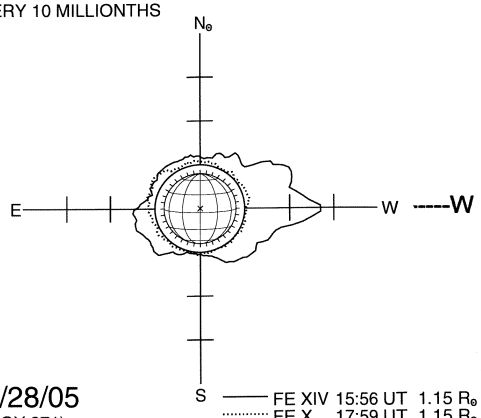

09/28/05
(DOY 271)

FE XIV 15:56 UT 1.15 R⊙
FE X 17:59 UT 1.15 R⊙
CA XV 17:29 UT 1.15 R⊙
NO CA XV ACTIVITY TODAY

S