SEPTEMBER 27, 2005 (P= 25.66, Bo = 6.89, Lo = 61.87)

KITT PEAK MAGNETOGRAM--SOLIS

854.2 nm

Bright = +
Dark = -

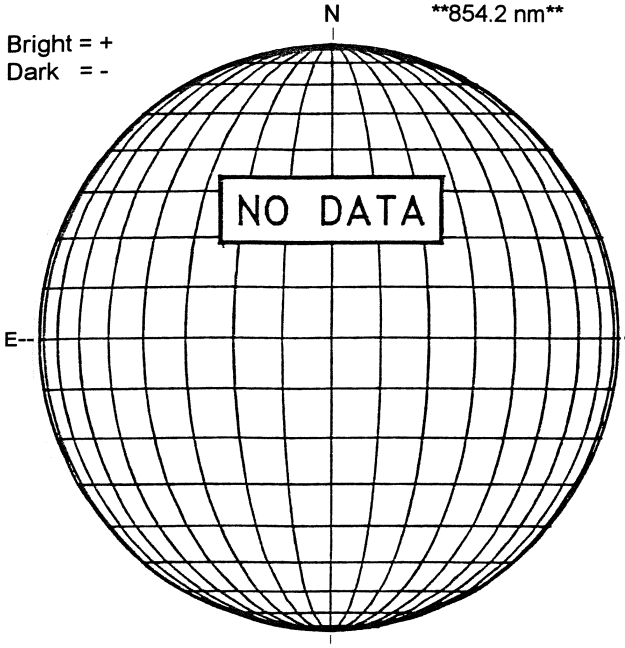

STANFORD MAGNETOGRAM

Solid = +
Dashed = -

2235 UT

MT. WILSON MAGNETOGRAM

DeltaY = 13.1
DeltaX = 9.6

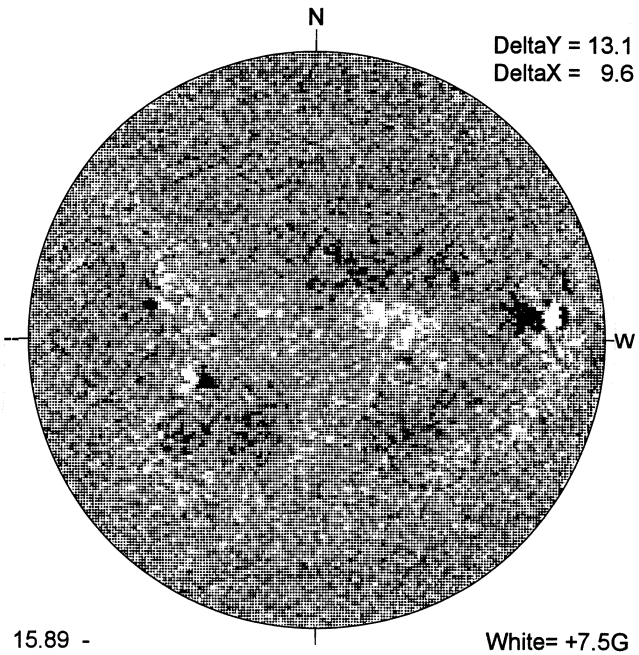

15.89 -
16.83 UT

White= +7.5G
Black = -7.5G

----- BIG BEAR H-ALPHA

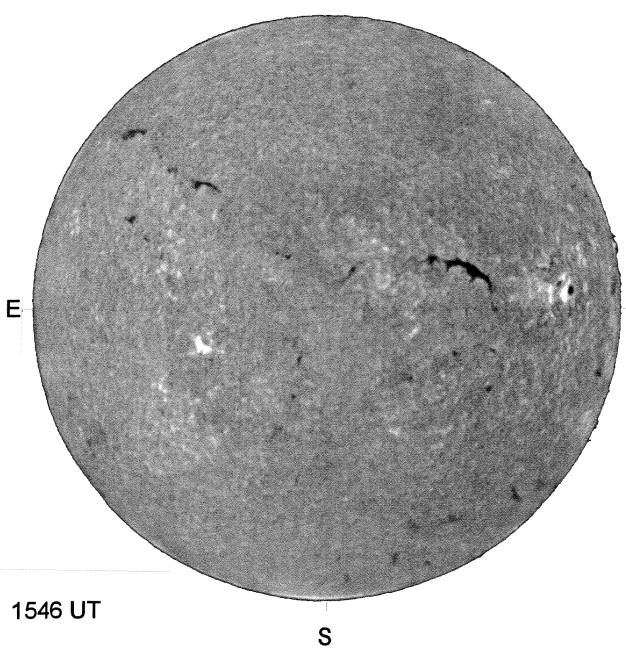

1546 UT

HOLLOMAN SUNSPOTS

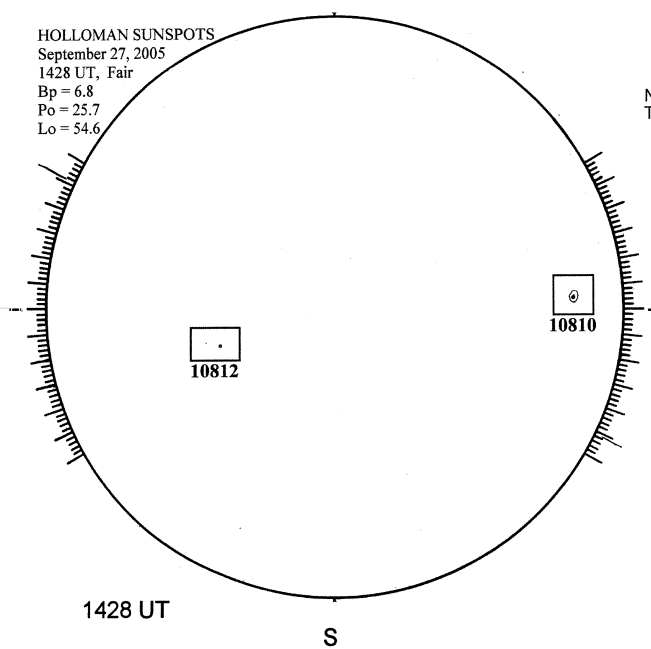

1428 UT
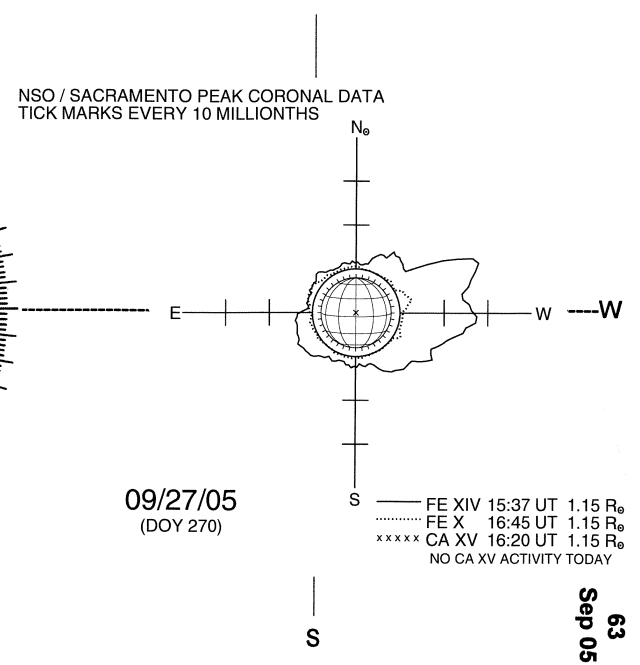
SACRAMENTO PEAK CORONA (1.15 Radii)----