SEPTEMBER 22, 2005 (P= 25.11, Bo = 7.06, Lo = 127.86)

KITT PEAK MAGNETOGRAM--SOLIS

854.2 nm

Bright = +
Dark = -

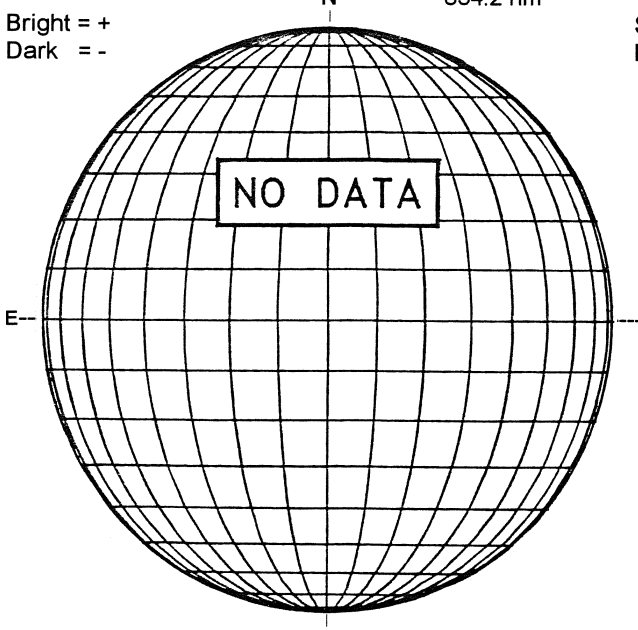

STANFORD MAGNETOGRAM

Solid = +
Dashed = -

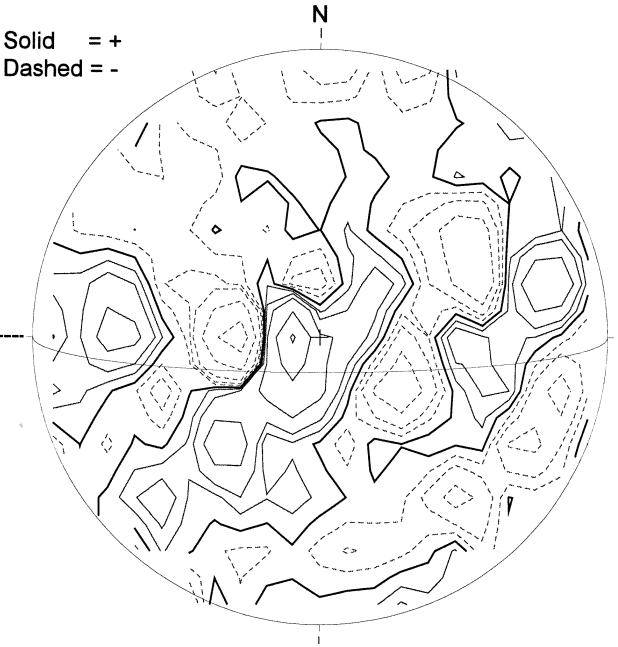

1936 UT

MT. WILSON MAGNETOGRAM

DeltaY = 13.0
DeltaX = 9.6

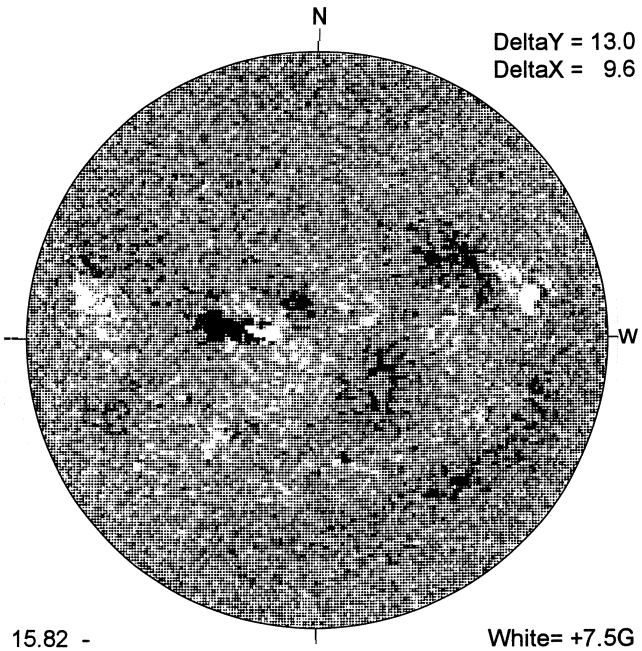

15.82 -
16.76 UT

White= +7.5G
Black = -7.5G

BIG BEAR H-ALPHA

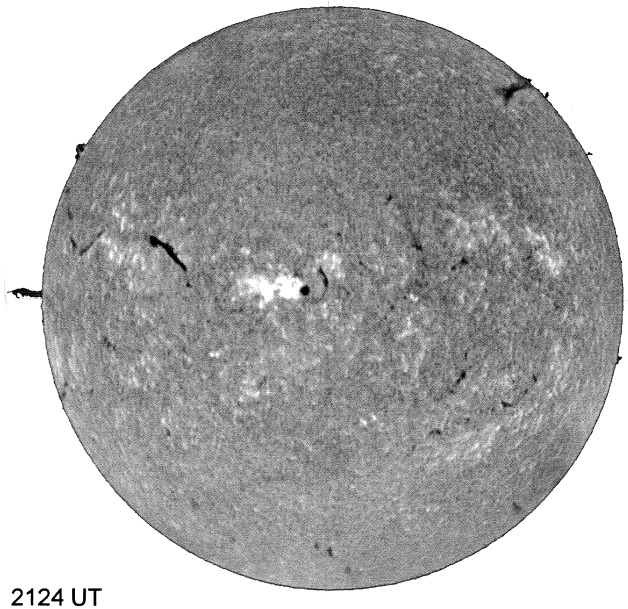

2124 UT

S

HOLLOMAN SUNSPOTS

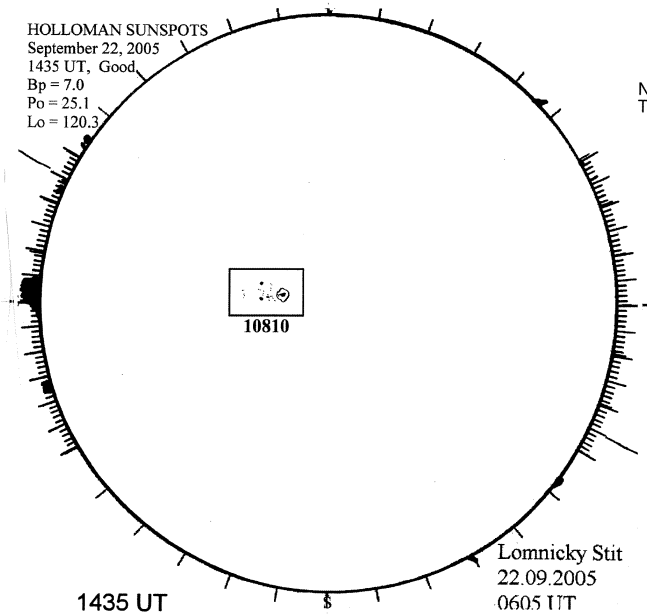

1435 UT
0605 UT LOMN Prom S

SACRAMENTO PEAK CORONA (1.15 Radii)----

NSO / SACRAMENTO PEAK CORONAL DATA
TICK MARKS EVERY 10 MILLIONTHS

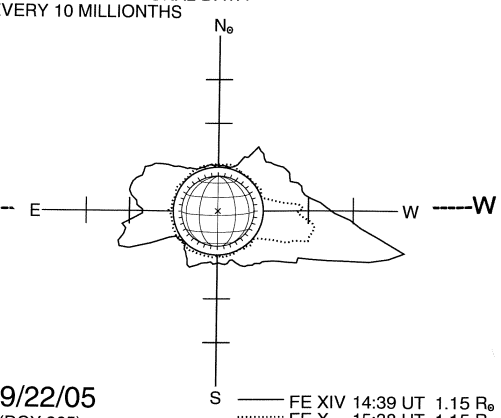

09/22/05
(DOY 265)

FE XIV 14:39 UT 1.15 R⊙
FE X 15:38 UT 1.15 R⊙
xxxxx CA XV 15:15 UT 1.15 R⊙
NO CA XV ACTIVITY TODAY

S