SEPTEMBER 14, 2005 (P= 23.89, Bo = 7.22, Lo = 233.47)

KITT PEAK MAGNETOGRAM--SOLIS

854.2 nm

Bright = +
Dark = -

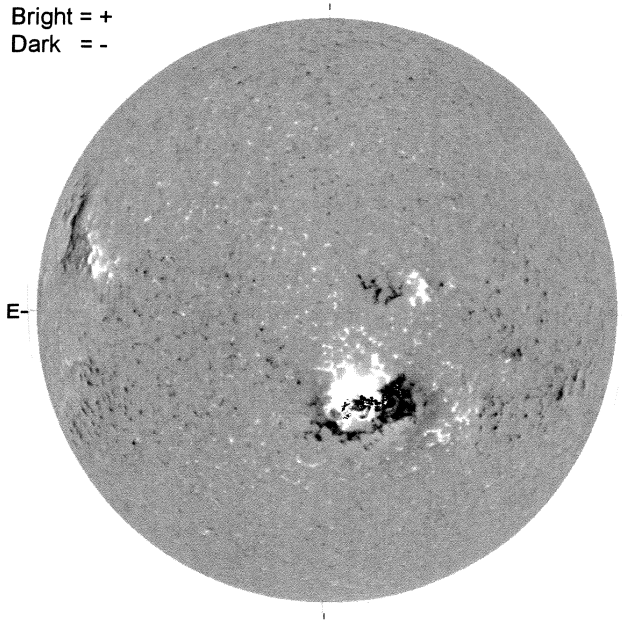

1836 UT

STANFORD MAGNETOGRAM

Solid = +
Dashed = -

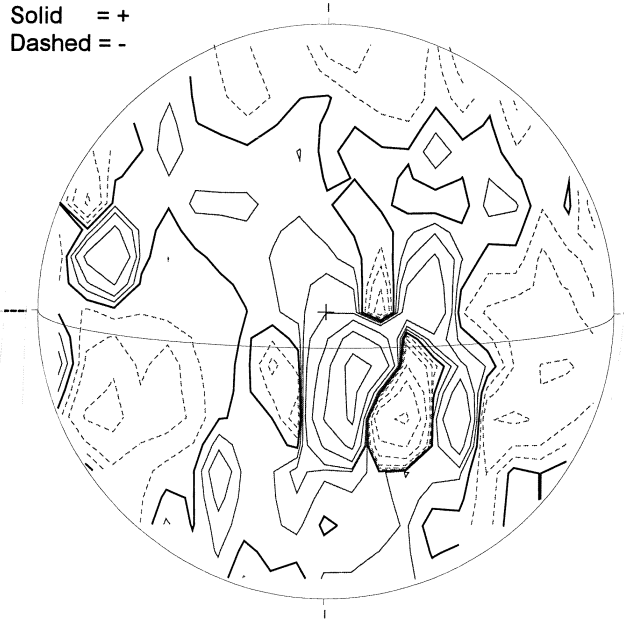

1950 UT

MT. WILSON MAGNETOGRAM

DeltaY = 13.0
DeltaX = 9.6

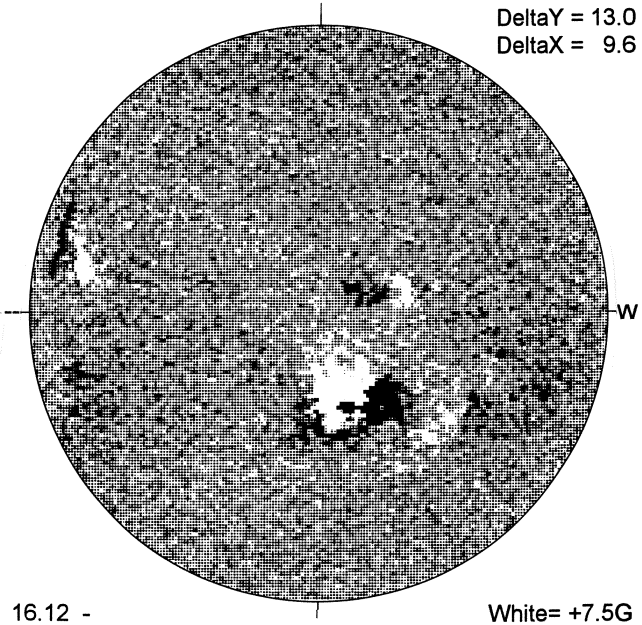

16.12 -
17.06 UT

White= +7.5G
Black = -7.5G

BIG BEAR H-ALPHA

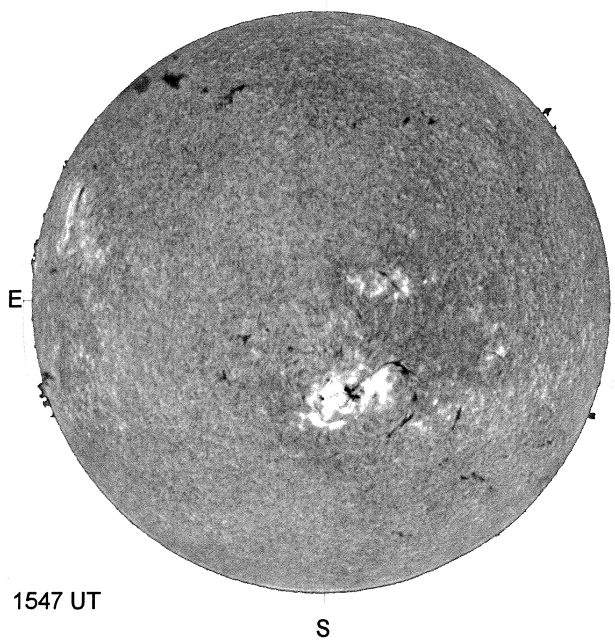

1547 UT

HOLLOMAN SUNSPOTS

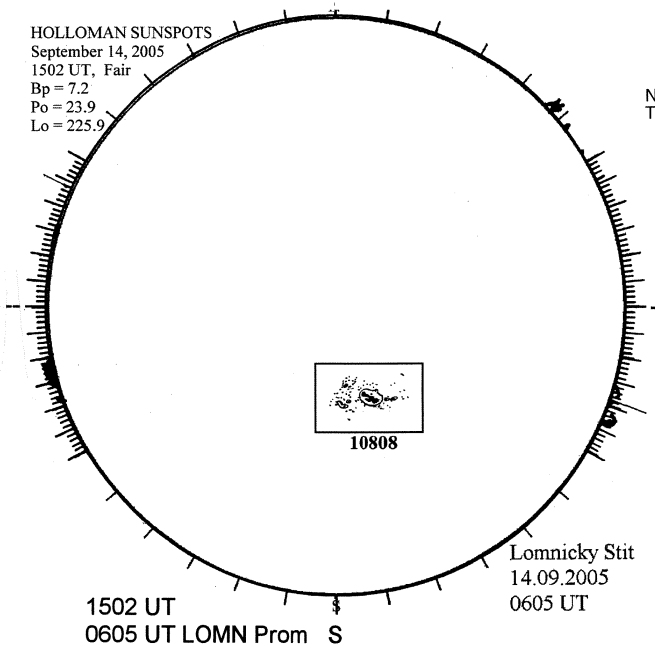

1502 UT
0605 UT LOMN Prom
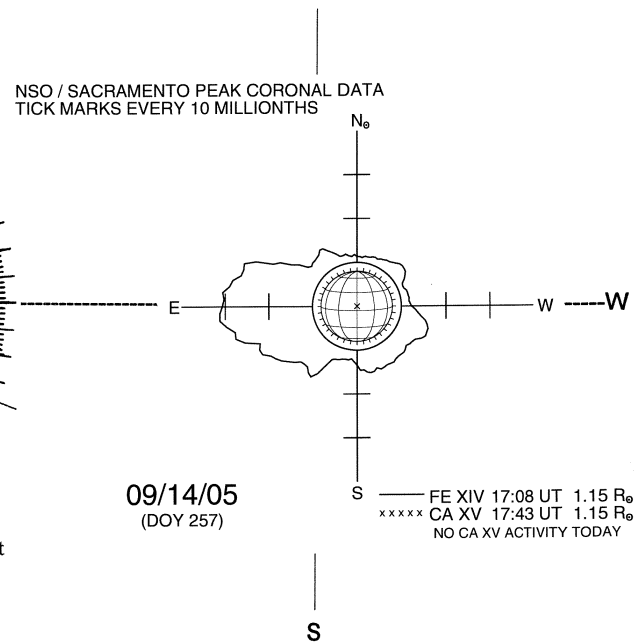
SACRAMENTO PEAK CORONA (1.15 Radii)