**SEPTEMBER 7, 2005 ( P= 22.50, Bo = 7.25, Lo = 325.90)**

KITT PEAK MAGNETOGRAM--SOLIS

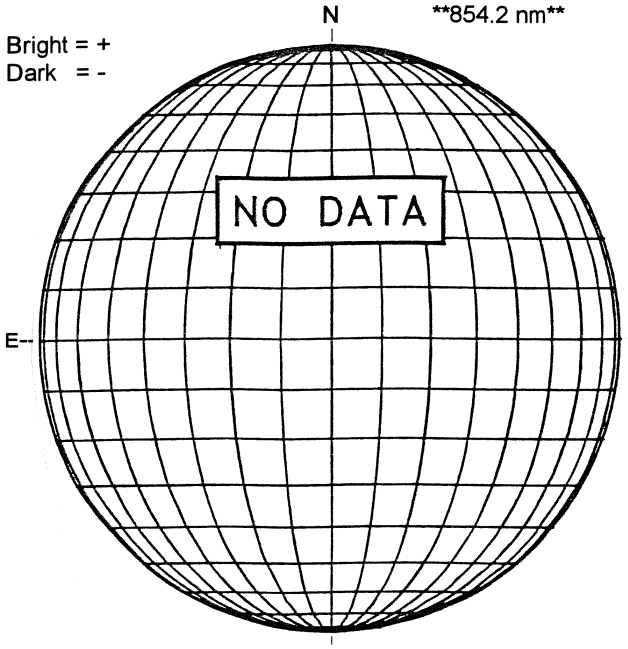


STANFORD MAGNETOGRAM

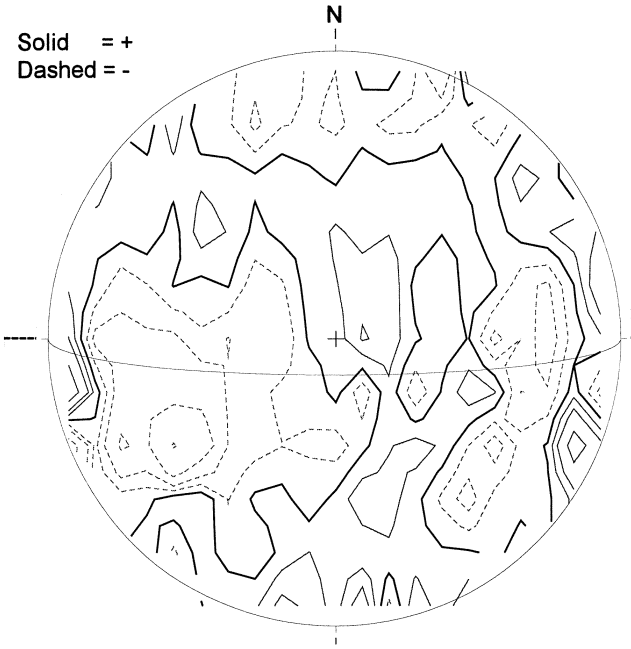


2132 UT

MT. WILSON MAGNETOGRAM

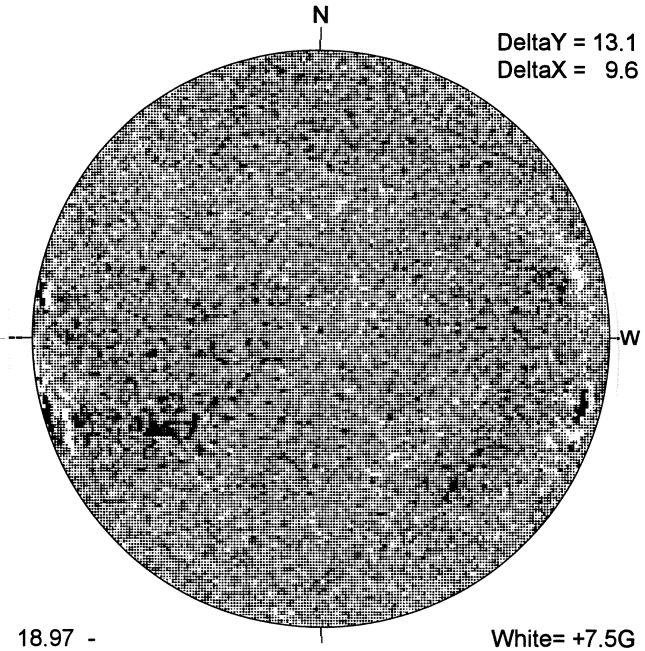


18.97 -
19.90 UT

BIG BEAR H-ALPHA

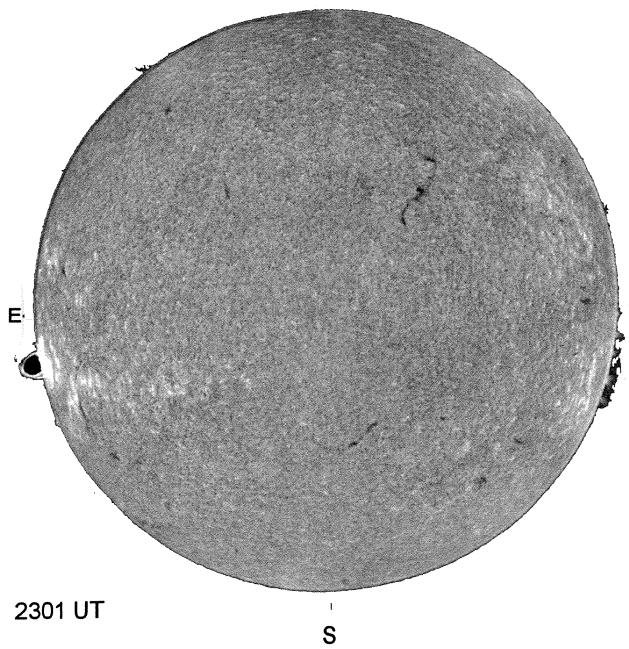


2301 UT

HOLLOMAN SUNSPOTS

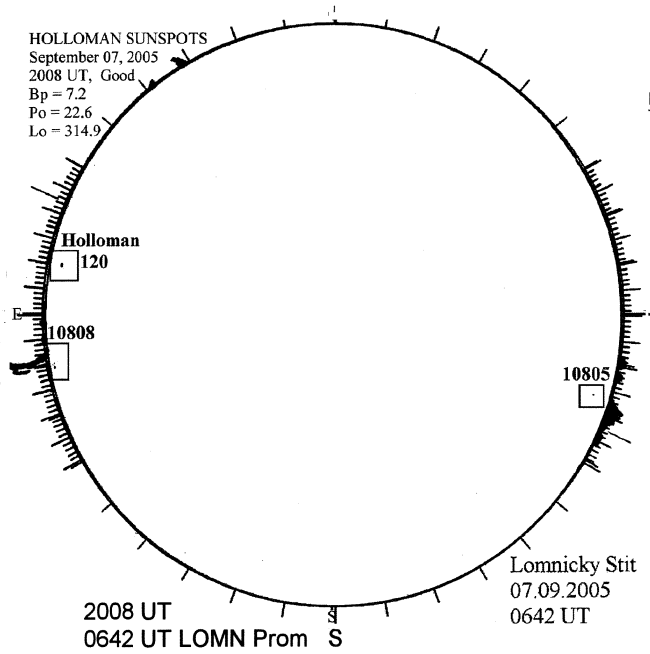


2008 UT
0642 UT LOMN Prom

SACRAMENTO PEAK CORONA (1.15 Radii)----

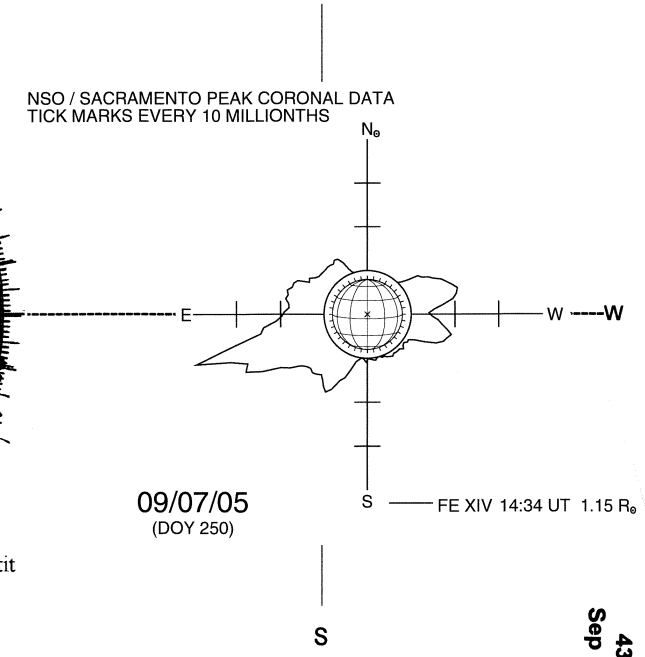


09/07/05
(DOY 250)

S