# AUGUST 30, 2005 ( P= 20.56, Bo = 7.16, Lo = 71.57)

## KITT PEAK MAGNETOGRAM—SOLIS

Bright = +
Dark = -

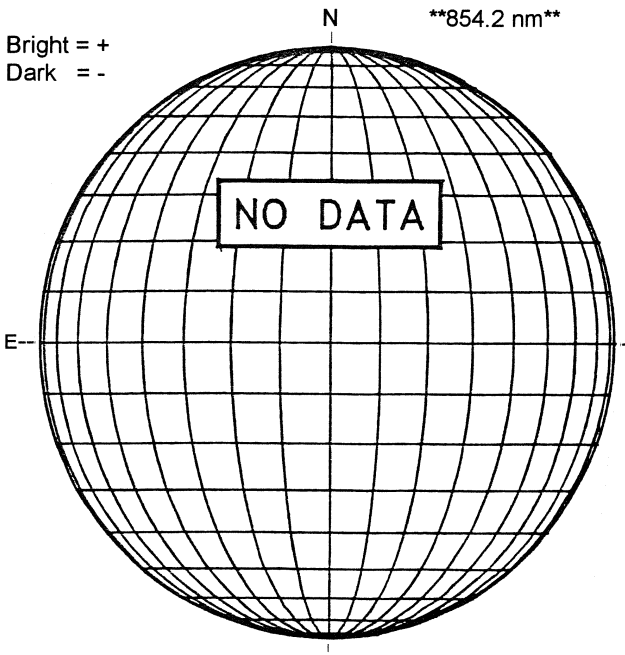


## STANFORD MAGNETOGRAM

Solid = +
Dashed = -

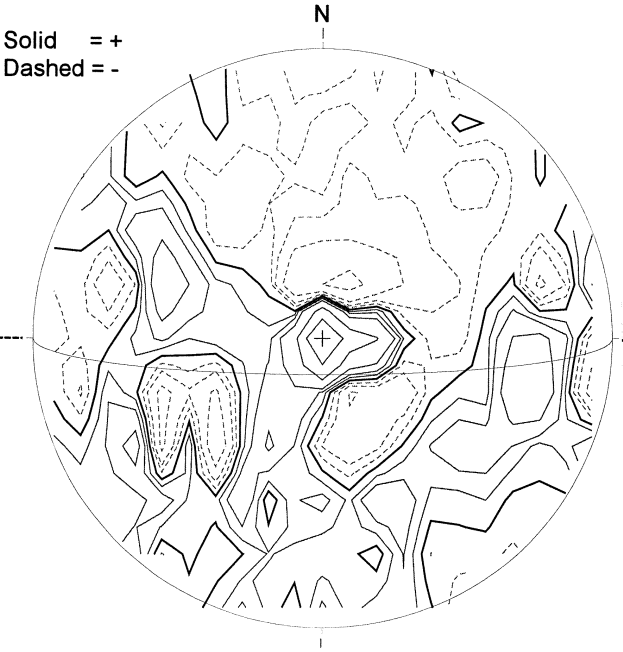


2243 UT

## MT. WILSON MAGNETOGRAM

DeltaY = 13.0
DeltaX = 9.6

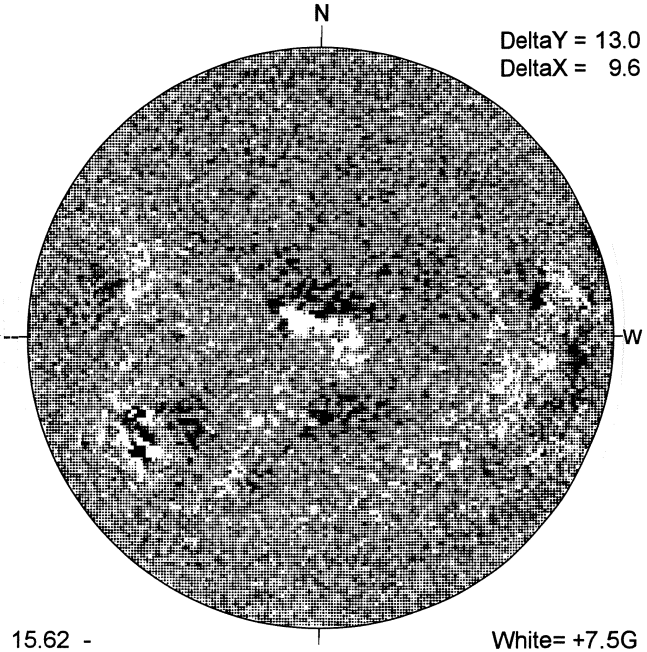


15.62 -
16.56 UT

White= +7.5G
Black = -7.5G

## BIG BEAR H-ALPHA

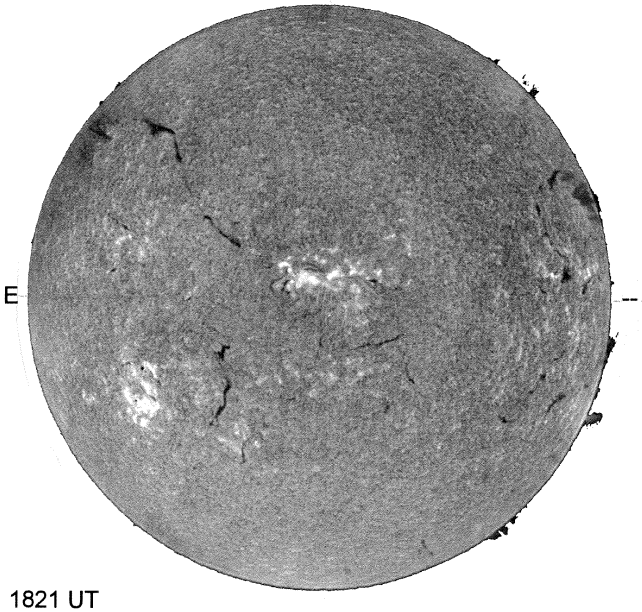


1821 UT

S

## HOLLOMAN SUNSPOTS

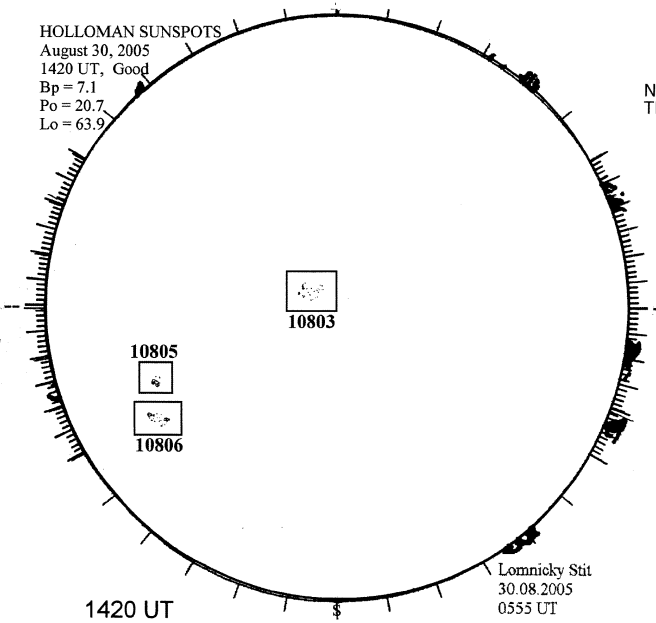


1420 UT
0555 UT LOMN Prom S

## SACRAMENTO PEAK CORONA (1.15 Radii)

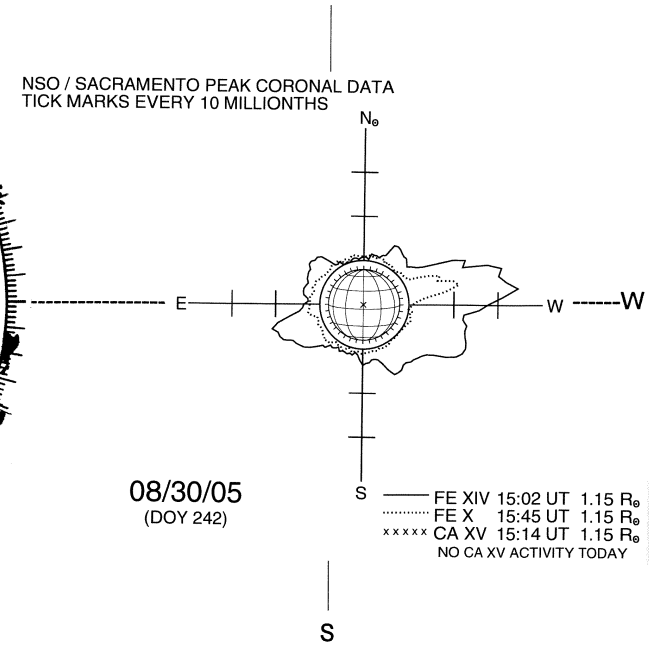


08/30/05
(DOY 242)

S