JULY 21, 2005 (P= 6.27, Bo = 4.89, Lo = 240.41)

KITT PEAK MAGNETOGRAM--SOLIS

854.2 nm

Bright = +
Dark = -

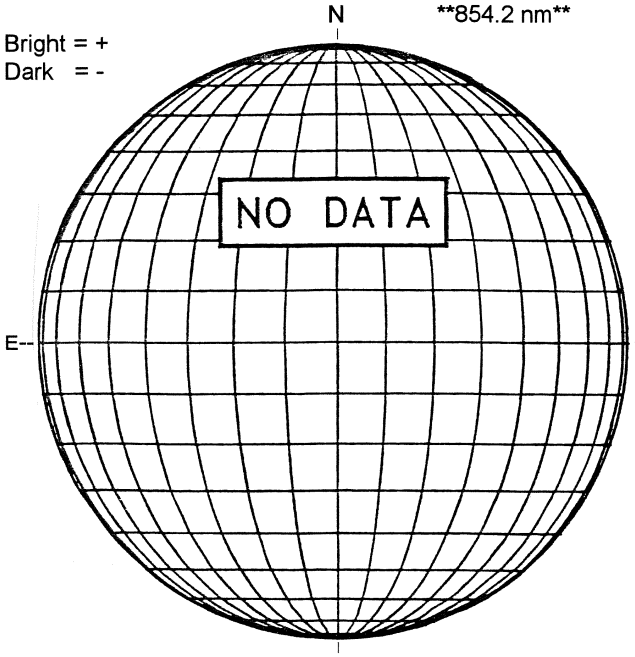

STANFORD MAGNETOGRAM

Solid = +
Dashed = -

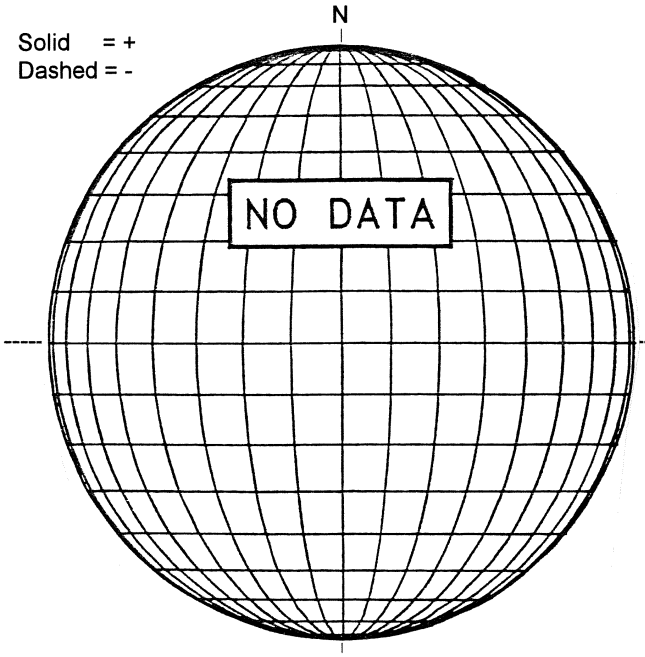

MT. WILSON MAGNETOGRAM

DeltaY = 13.0
DeltaX = 9.6

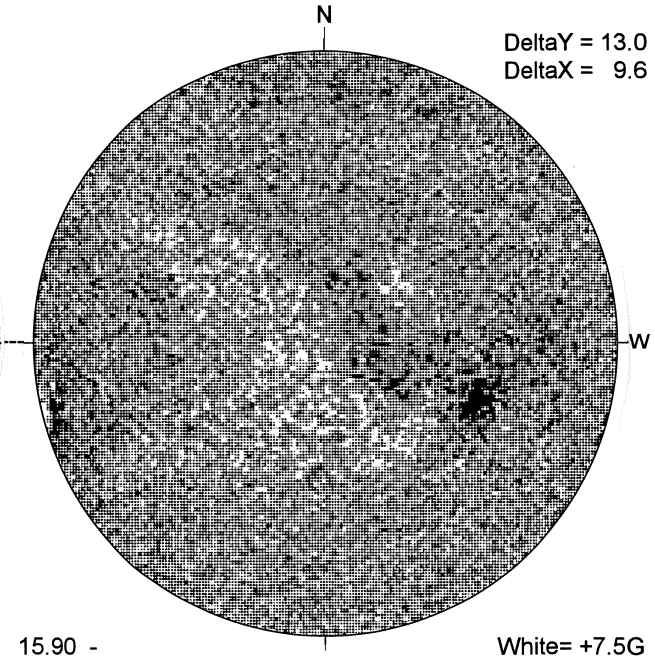

15.90 -
16.83 UT

White= +7.5G
Black = -7.5G

BIG BEAR H-ALPHA

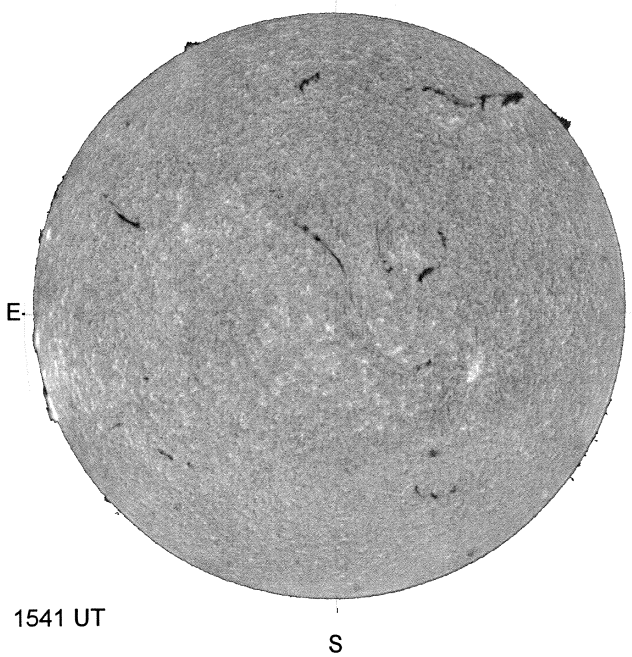

1541 UT

SAN VITO SUNSPOTS

SAN VITO SUNSPOTS
July 21, 2005
1600 UT, Fair
Bp = 4.9
Po = 6.3
Lo = 237.1

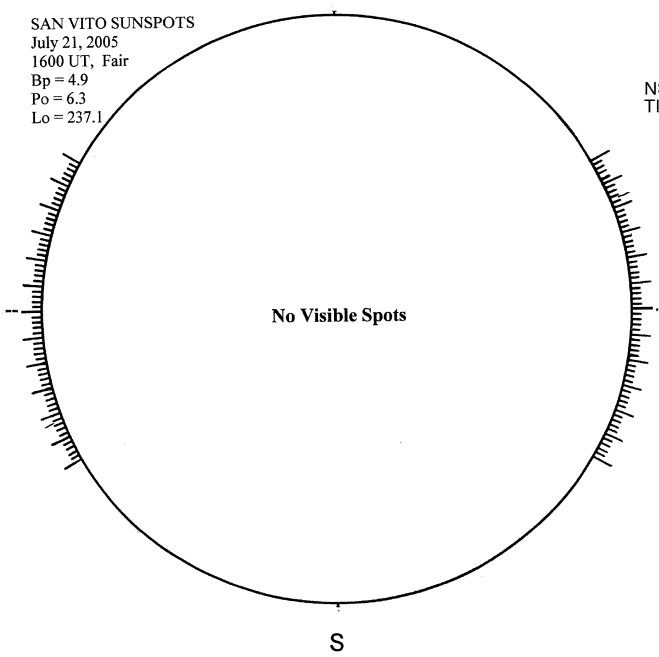

SACRAMENTO PEAK CORONA (1.15 Radii)----

NSO / SACRAMENTO PEAK CORONAL DATA
TICK MARKS EVERY 10 MILLIONTHS

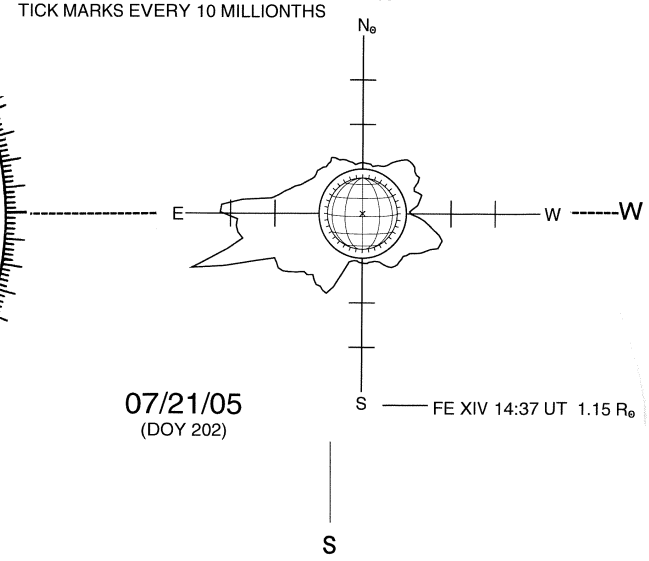

07/21/05
(DOY 202)