JULY 20, 2005 (P= 5.84, Bo = 4.80, Lo = 253.64)

KITT PEAK MAGNETOGRAM--SOLIS

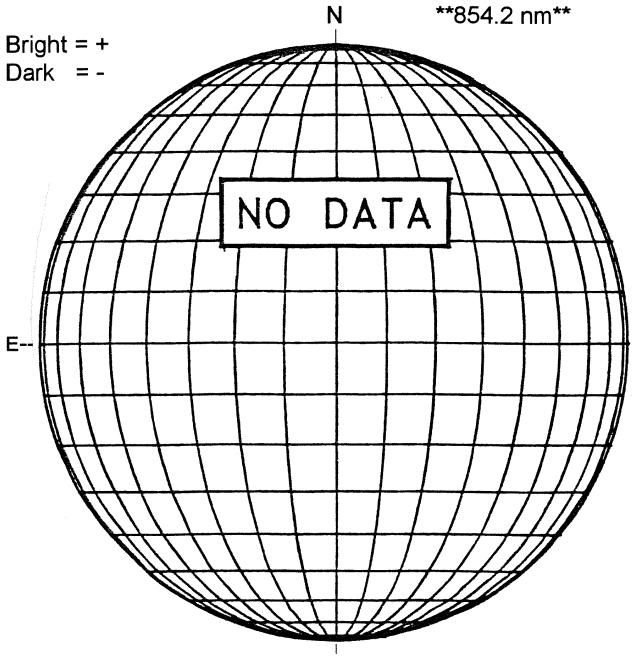

STANFORD MAGNETOGRAM

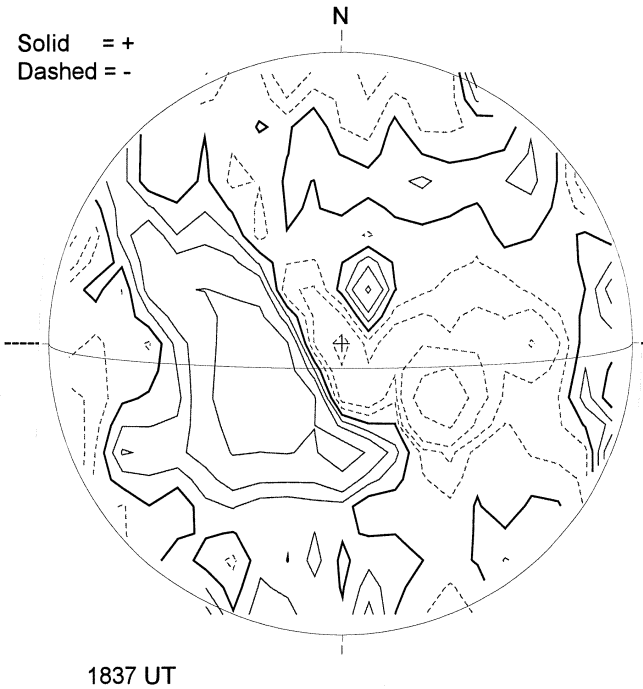

MT. WILSON MAGNETOGRAM

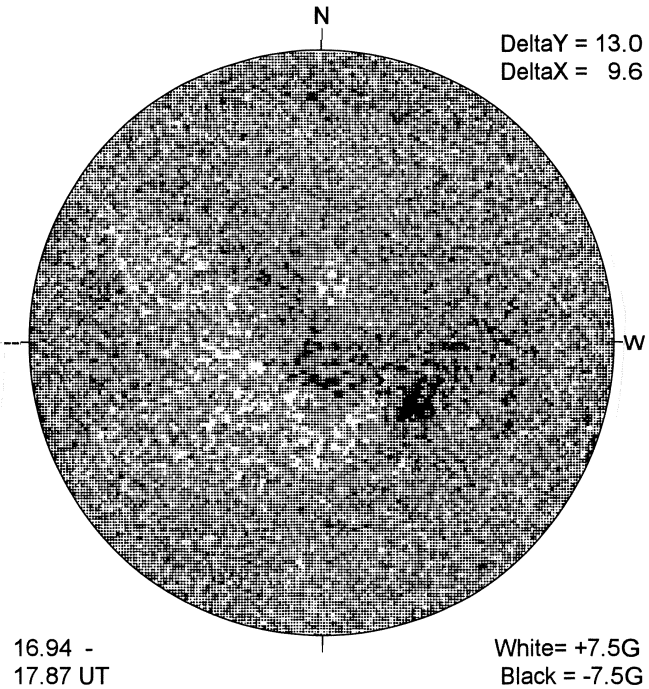

---- BIG BEAR H-ALPHA

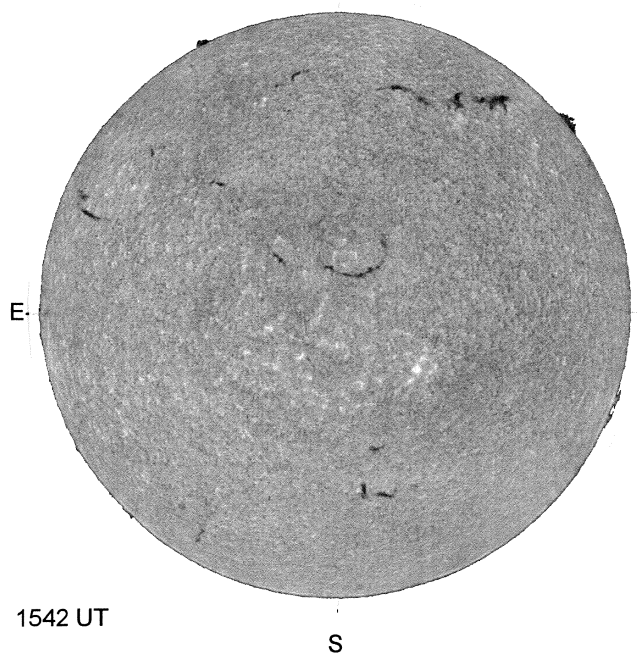

SAN VITO SUNSPOTS

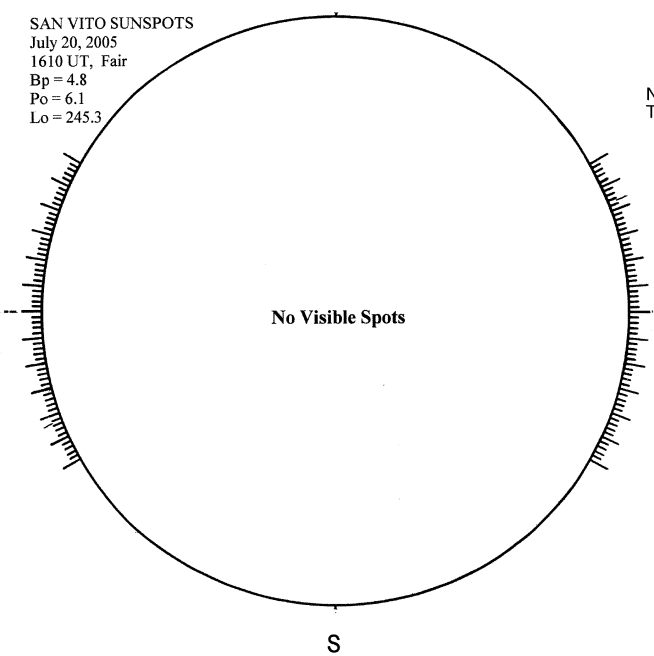
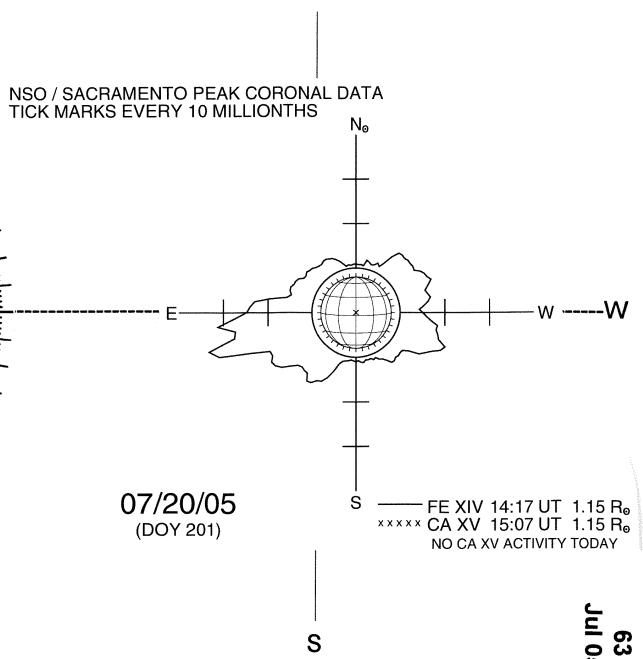
SACRAMENTO PEAK CORONA (1.15 Radii)----