JULY 19, 2005 (P= 5.41, Bo = 4.71, Lo = 266.87)

KITT PEAK MAGNETOGRAM--SOLIS

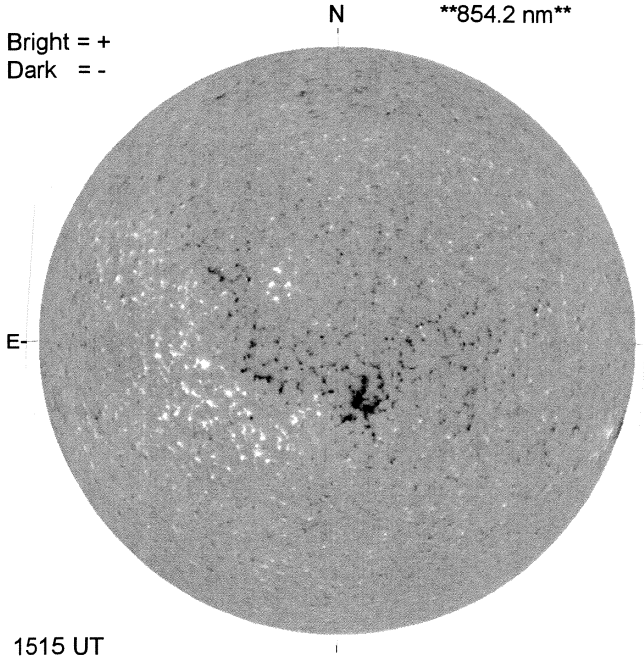

STANFORD MAGNETOGRAM

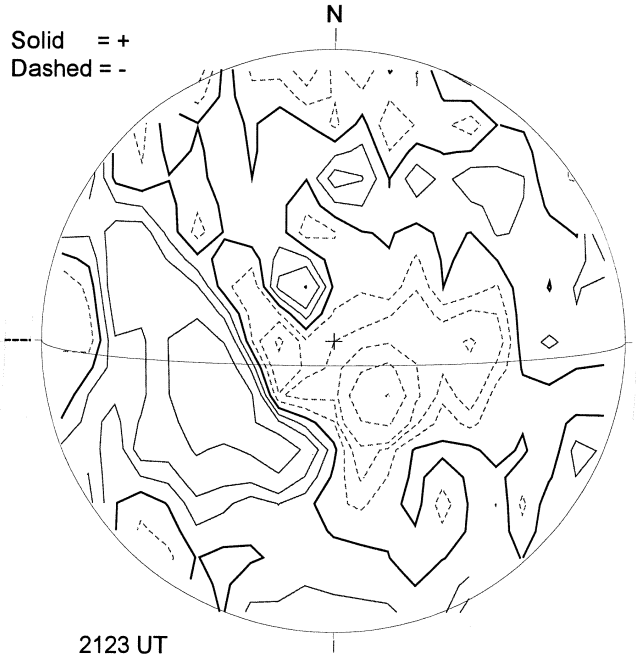

MT. WILSON MAGNETOGRAM

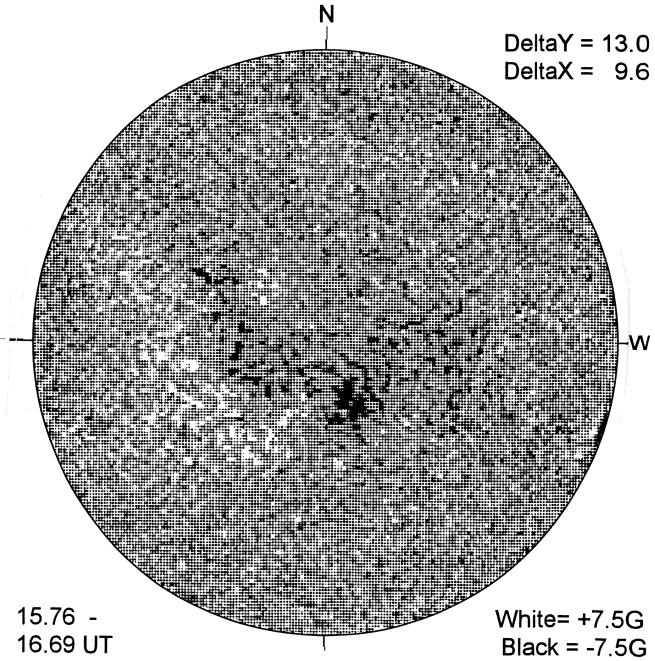

BIG BEAR H-ALPHA

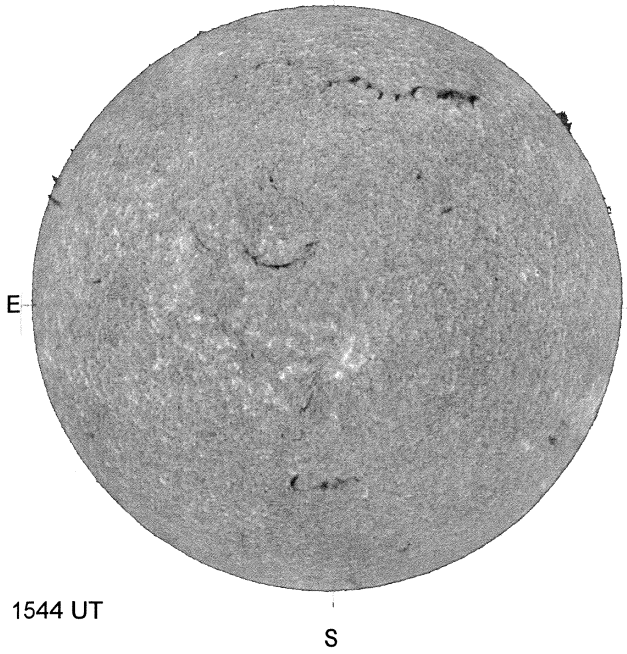

SAN VITO SUNSPOTS

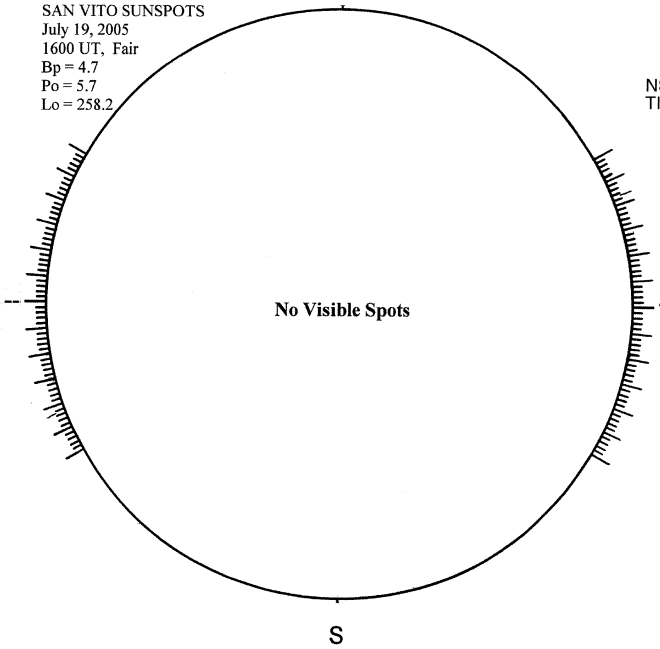
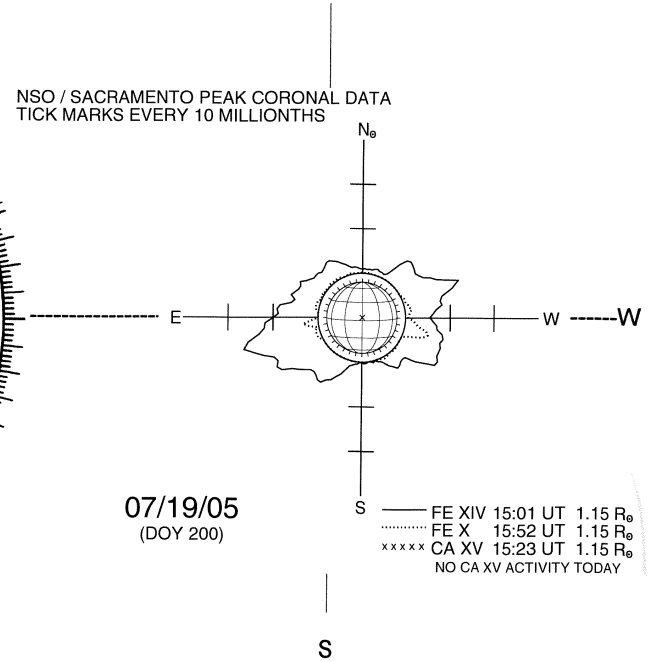
SACRAMENTO PEAK CORONA (1.15 Radii)