JULY 14, 2005 (P= 3.21, Bo = 4.24, Lo = 333.03)

KITT PEAK MAGNETOGRAM--SOLIS

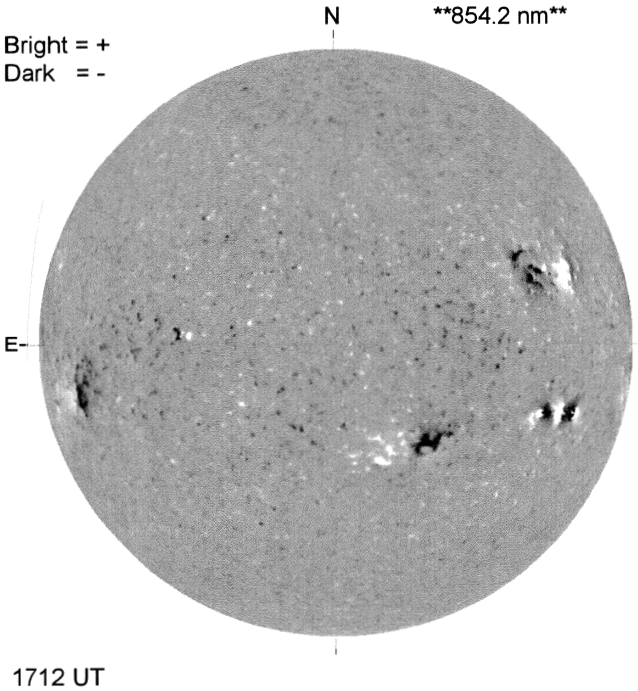

STANFORD MAGNETOGRAM

MT. WILSON MAGNETOGRAM

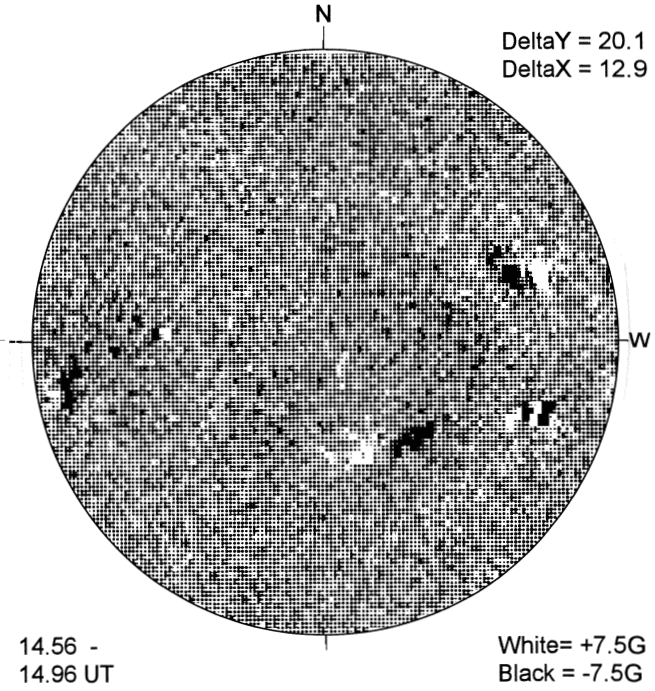

BIG BEAR H-ALPHA

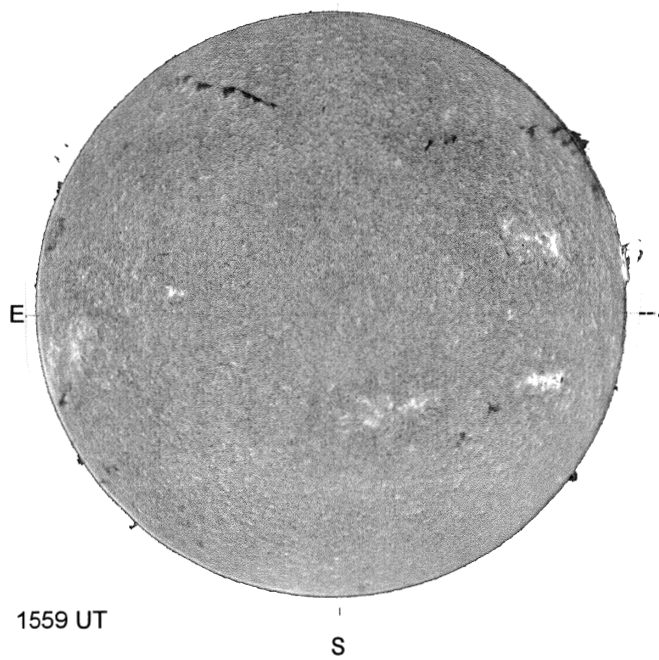

HOLLOMAN SUNSPOTS

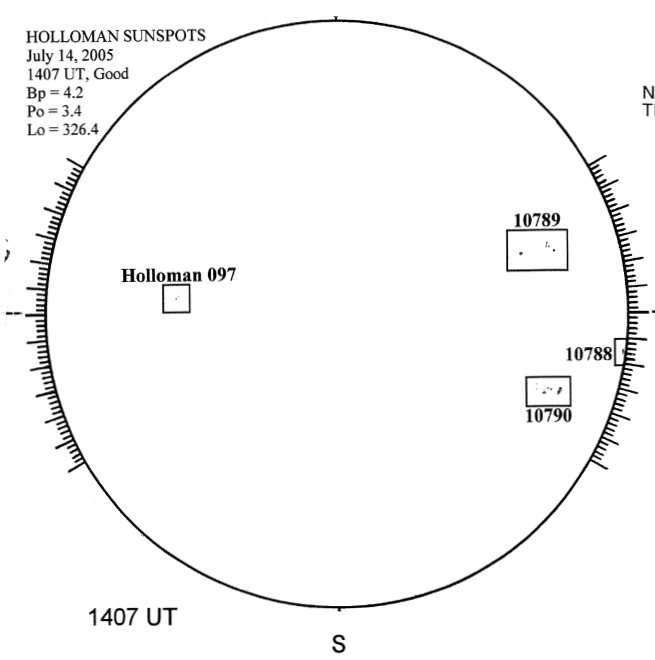
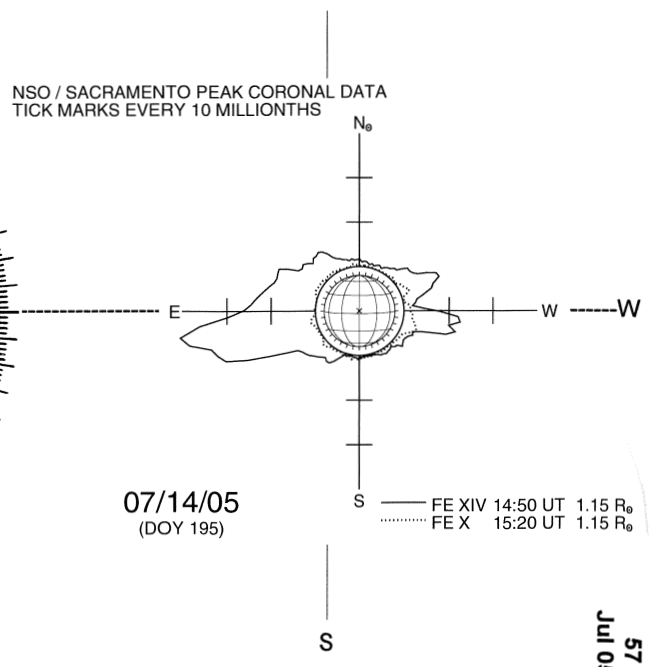
SACRAMENTO PEAK CORONA (1.15 Radii)----