JULY 7, 2005 (P= 0.06, Bo = 3.53, Lo = 65.67)

KITT PEAK MAGNETOGRAM--SOLIS

N **854.2 nm**

Bright = +
Dark = -

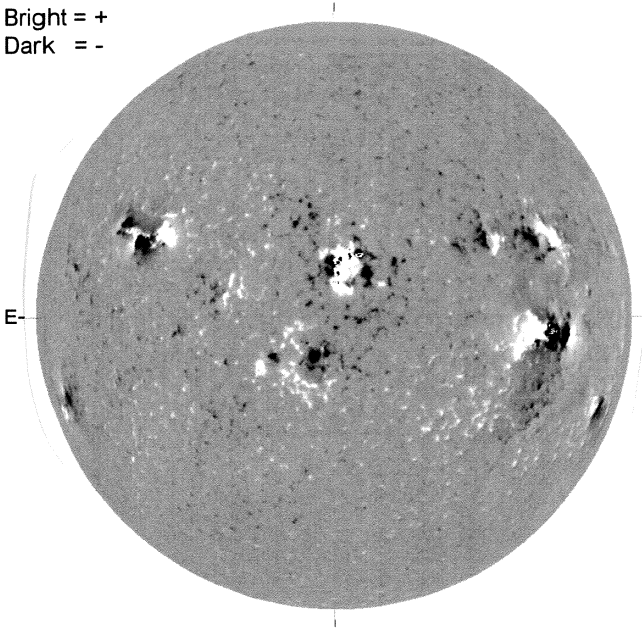

E-

2019 UT

STANFORD MAGNETOGRAM

N

Solid = +
Dashed = -

2021 UT

MT. WILSON MAGNETOGRAM

N

DeltaY = 13.1
DeltaX = 9.6

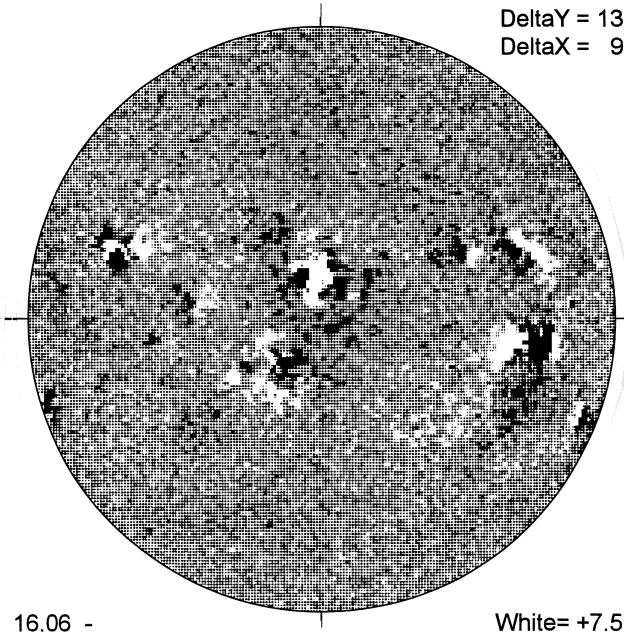

-W

16.06 -
16.98 UT

White= +7.5G
Black = -7.5G

MEUDON H-ALPHA

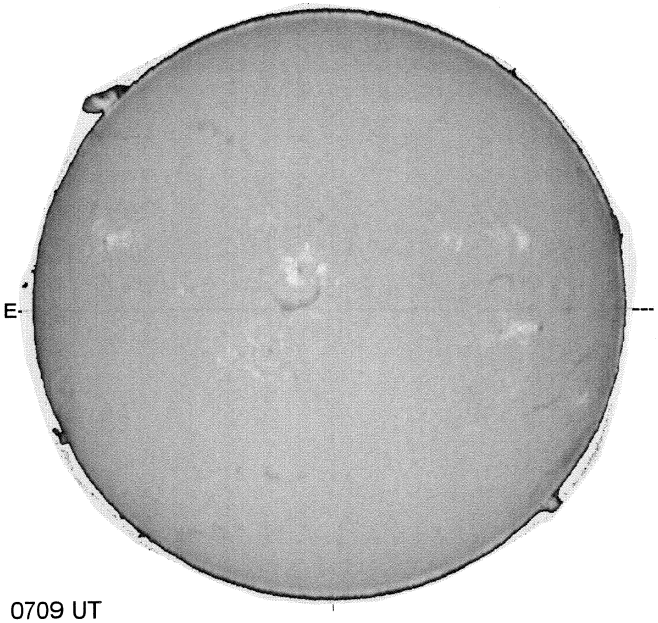

E-

0709 UT

S

HOLLOMAN SUNSPOTS

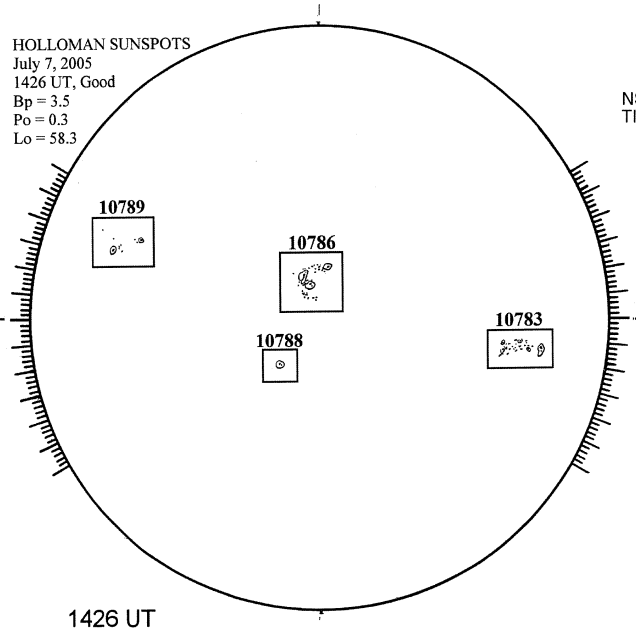

1426 UT

S

SACRAMENTO PEAK CORONA (1.15 Radii)----

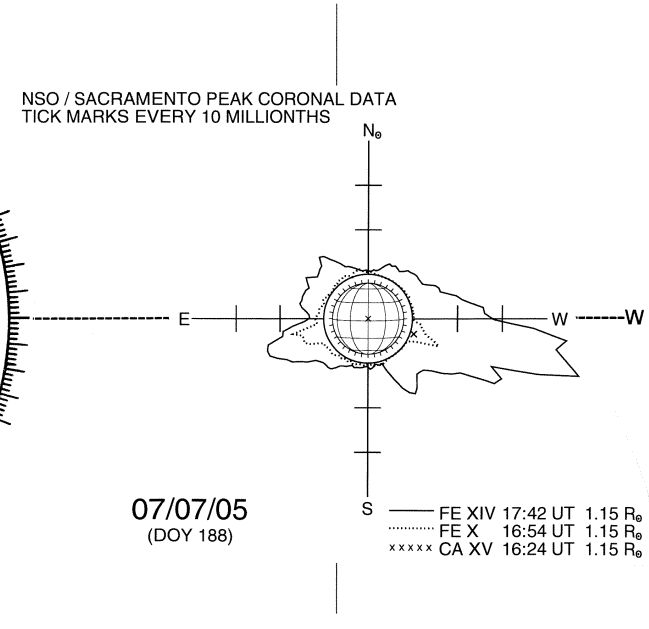

S