JUNE 30, 2005 (P= - 3.12, Bo = 2.77, Lo = 158.32)

KITT PEAK MAGNETOGRAM—SOLIS

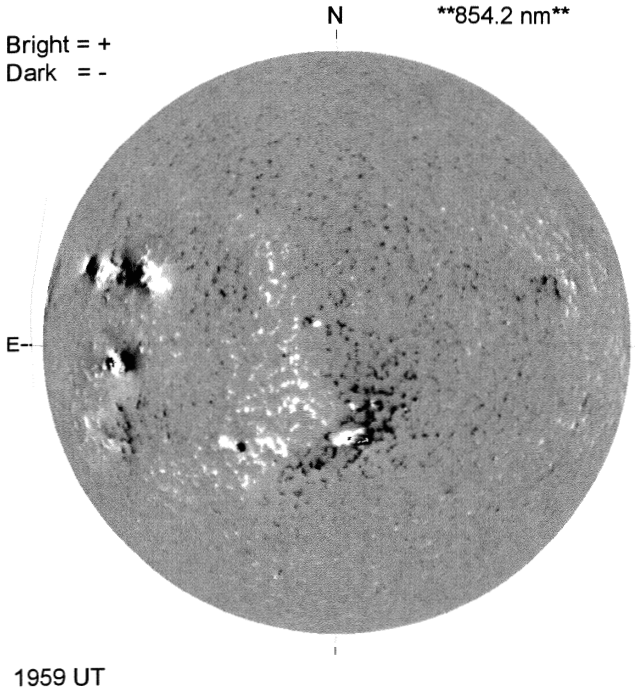

STANFORD MAGNETOGRAM

MT. WILSON MAGNETOGRAM

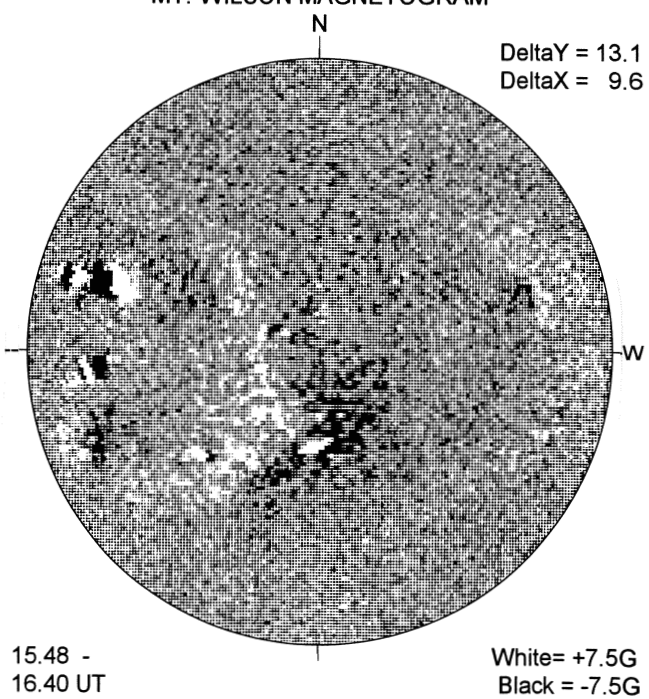

MEUDON H-ALPHA

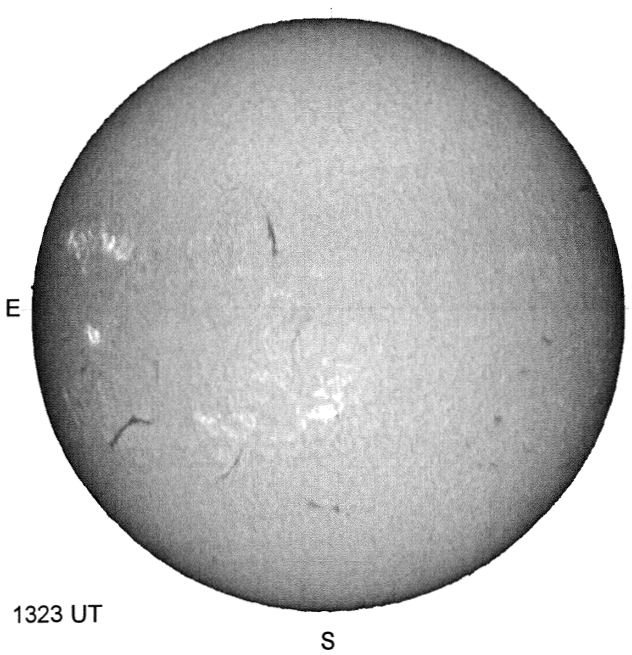

HOLLOMAN SUNSPOTS

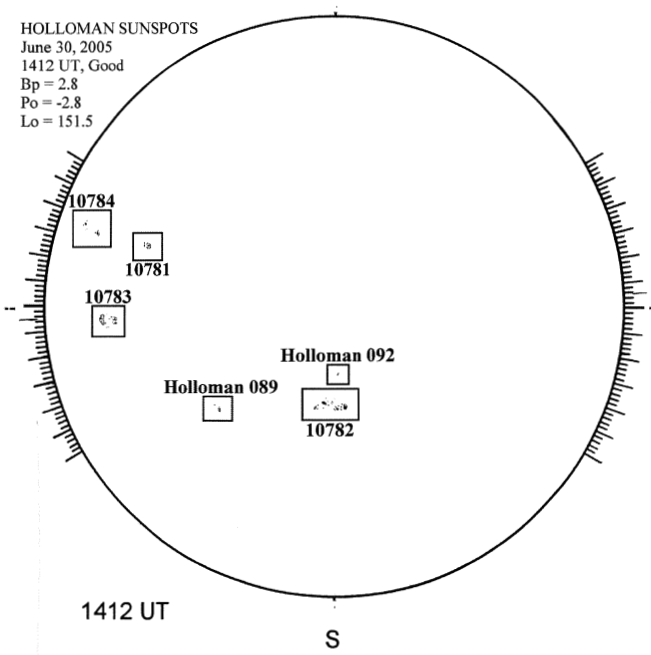
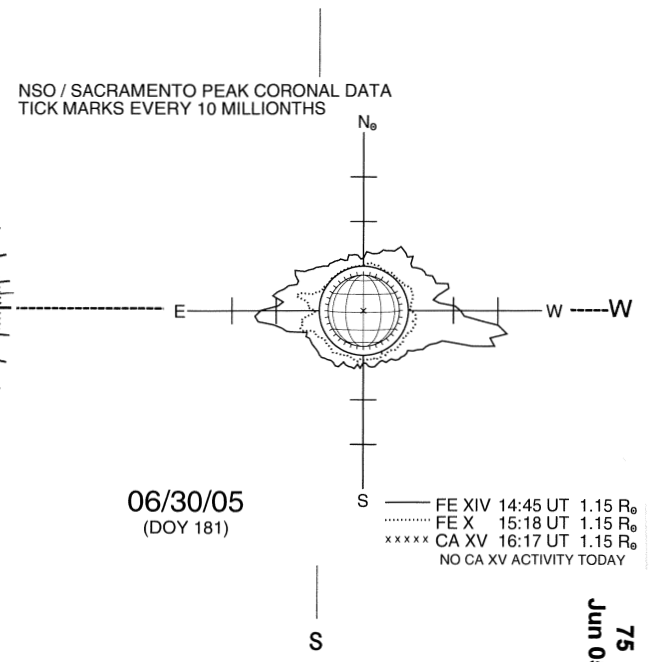
SACRAMENTO PEAK CORONA (1.15 Radii)