JUNE 29, 2005 (P= - 3.57, Bo = 2.66, Lo = 171.55)

KITT PEAK MAGNETOGRAM--SOLIS

854.2 nm

Bright = +
Dark = -

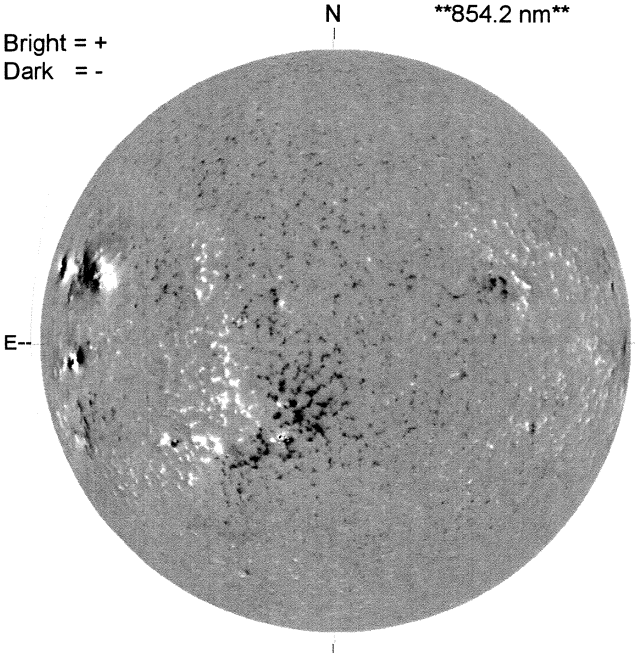

1855 UT

STANFORD MAGNETOGRAM

Solid = +
Dashed = -

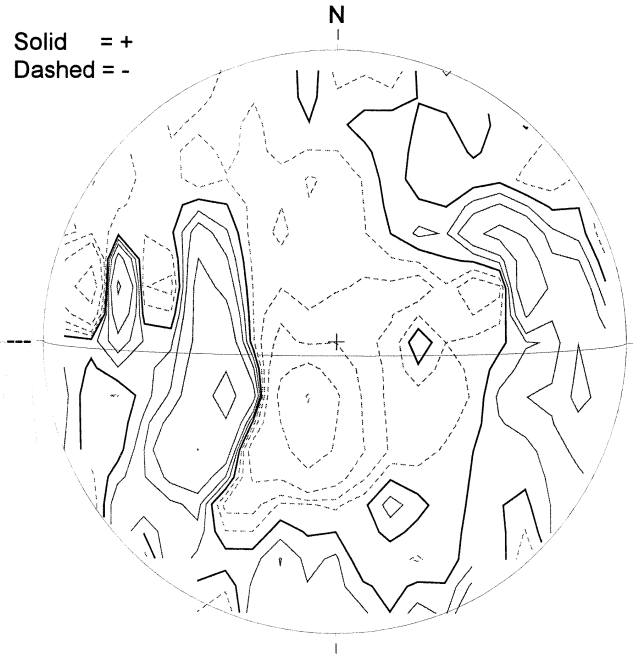

2012 UT

MT. WILSON MAGNETOGRAM

DeltaY = 13.1
DeltaX = 9.6

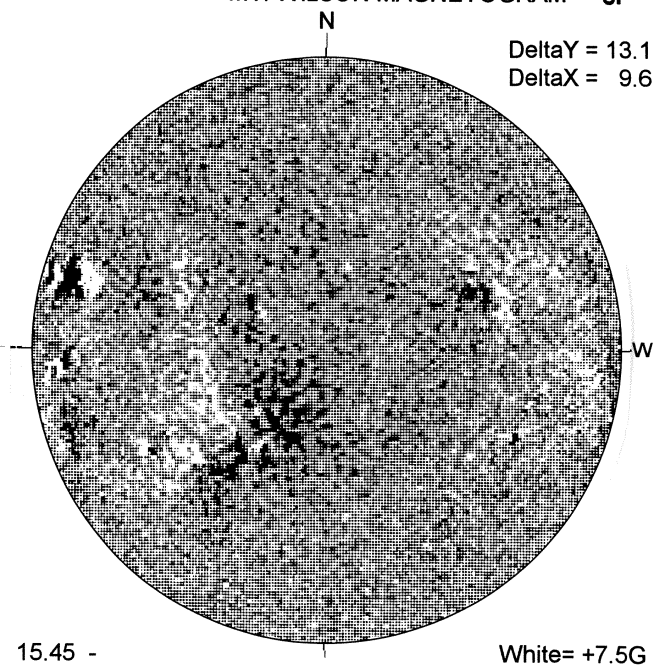

15.45 -
16.37 UT

White= +7.5G
Black = -7.5G

MEUDON H-ALPHA

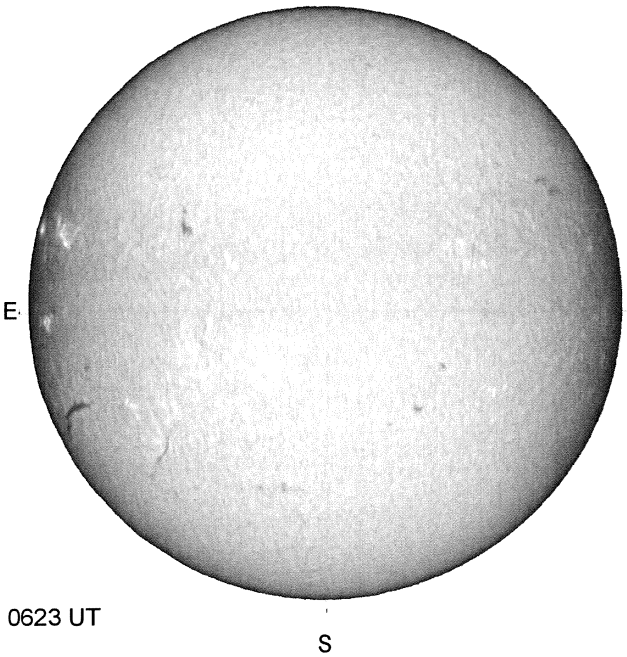

0623 UT

S

HOLLOMAN SUNSPOTS

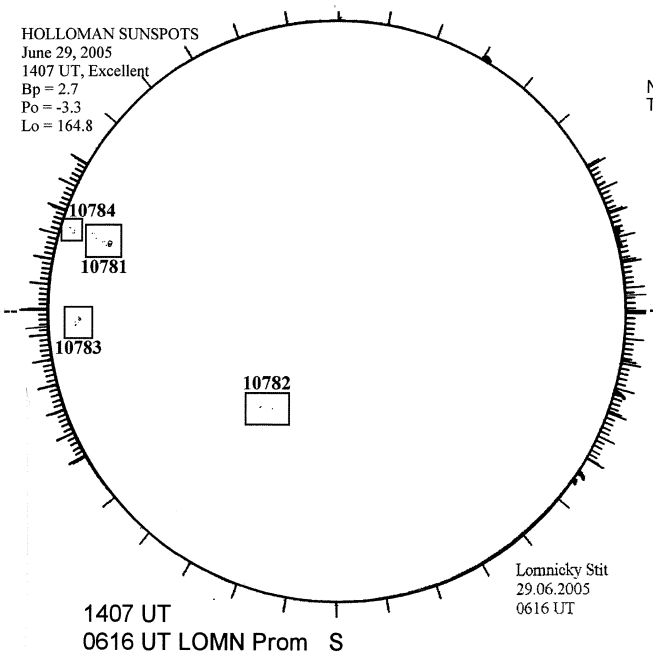

1407 UT
0616 UT LOMN Prom S

LOMNICKY PEAK CORONA (1.04 Radii)

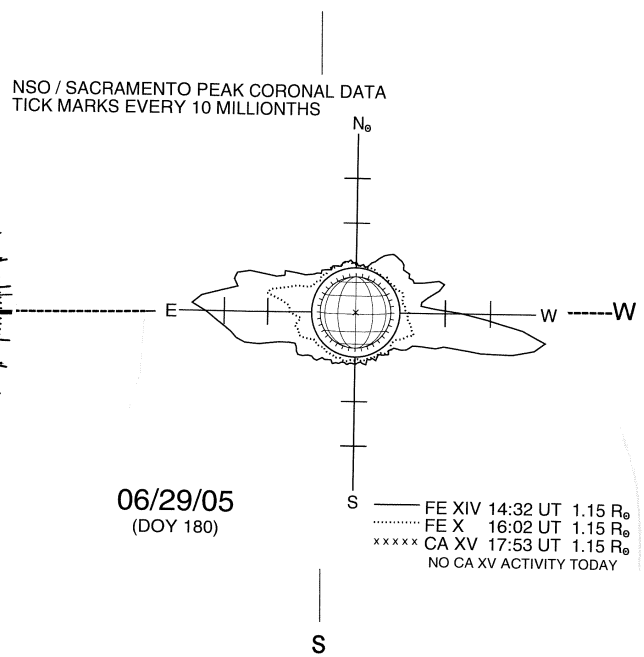

06/29/05
(DOY 180)

S