JUNE 28, 2005 (P= - 4.02, Bo = 2.54, Lo = 184.79)

KITT PEAK MAGNETOGRAM--SOLIS

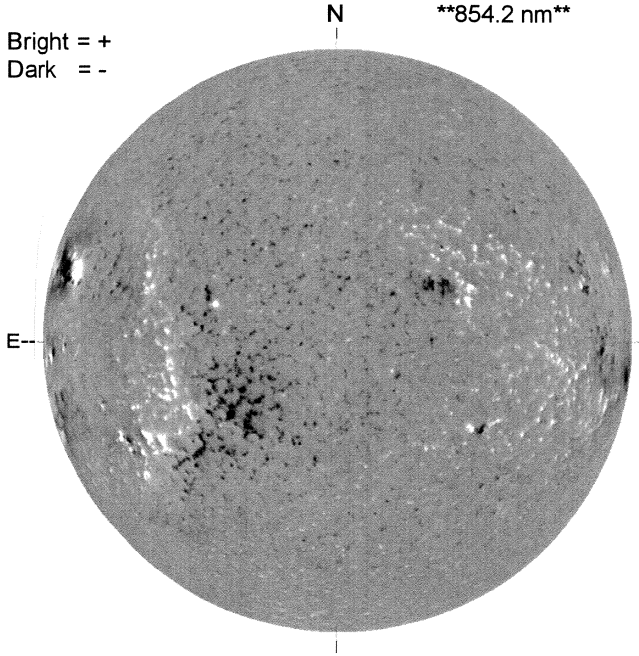

STANFORD MAGNETOGRAM

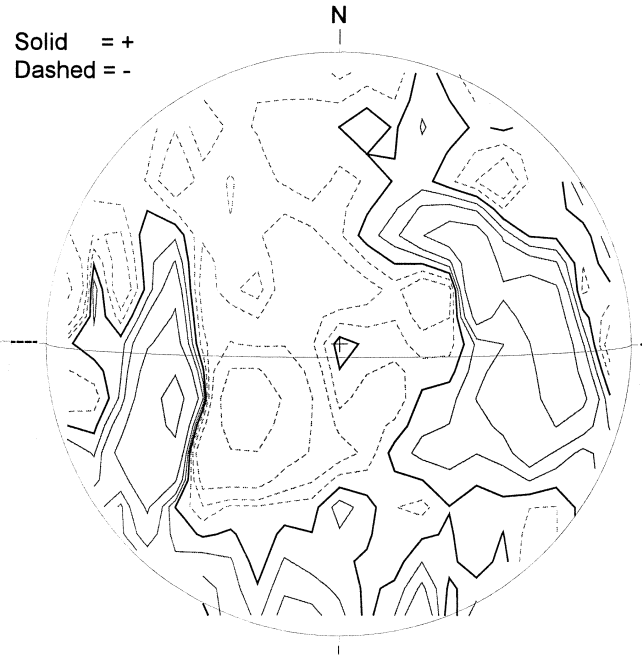

MT. WILSON MAGNETOGRAM

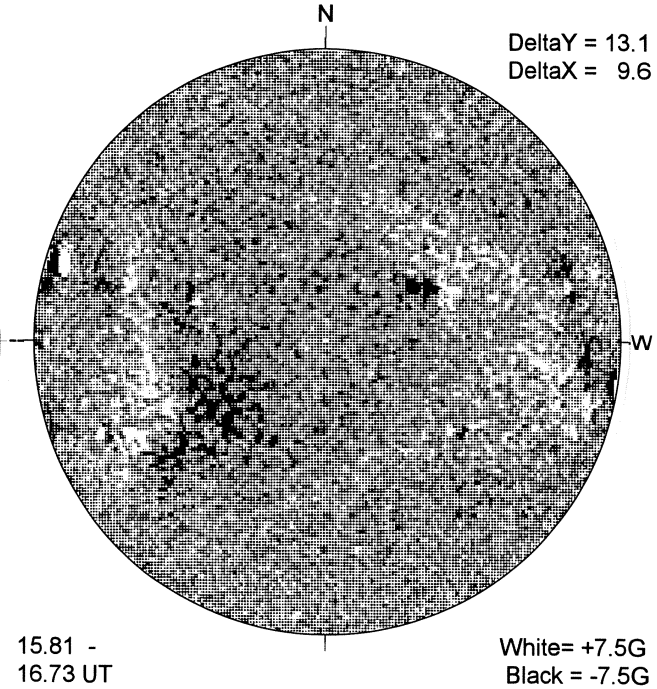

BIG BEAR H-ALPHA

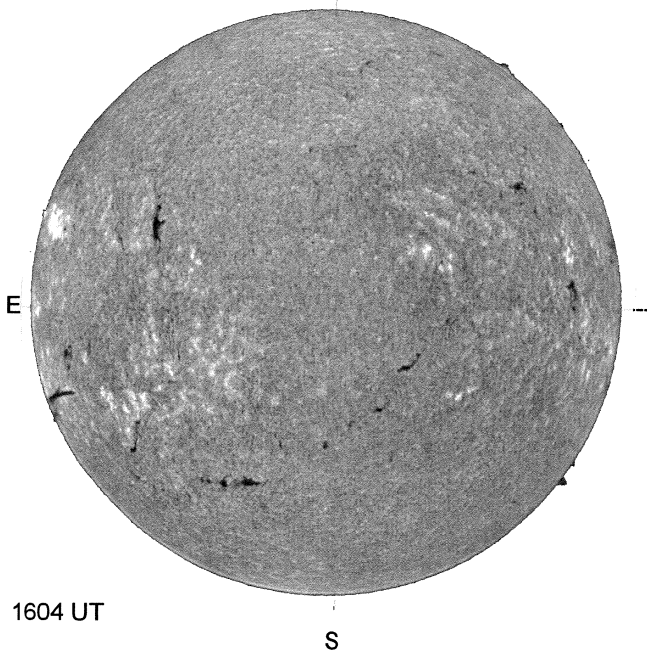

HOLLOMAN SUNSPOTS

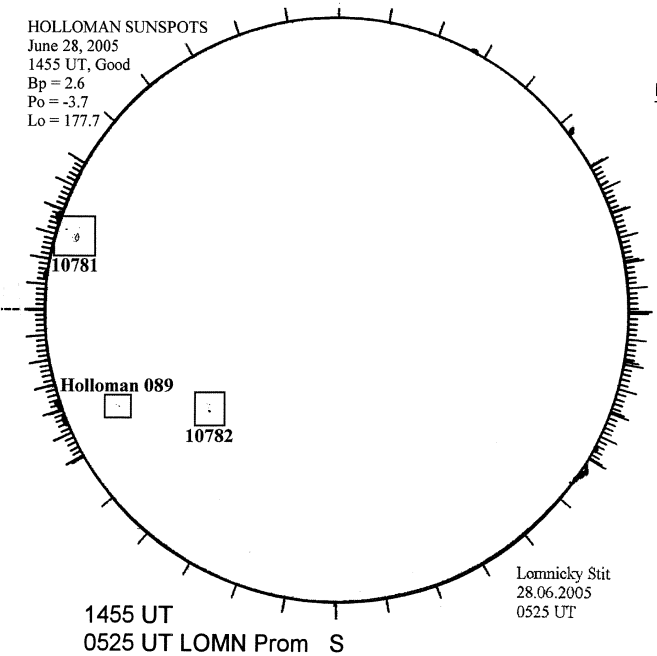
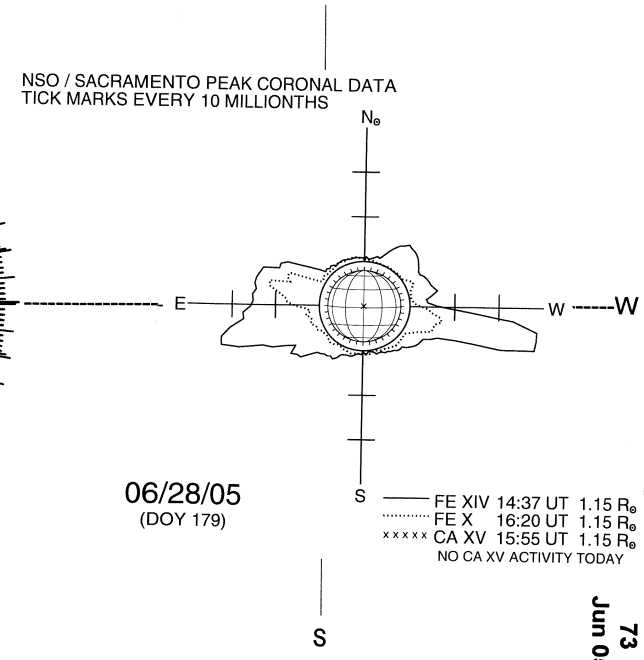
LOMNICKY PEAK CORONA (1.04 Radii)----