JUNE 27, 2005 (P= - 4.47, Bo = 2.43, Lo = 198.03)

KITT PEAK MAGNETOGRAM--SOLIS

854.2 nm

Bright = +
Dark = -

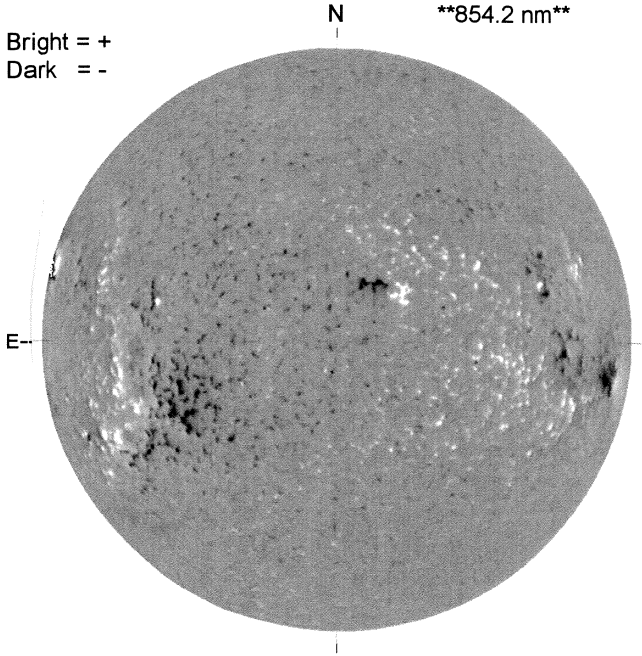

1815 UT

STANFORD MAGNETOGRAM

Solid = +
Dashed = -

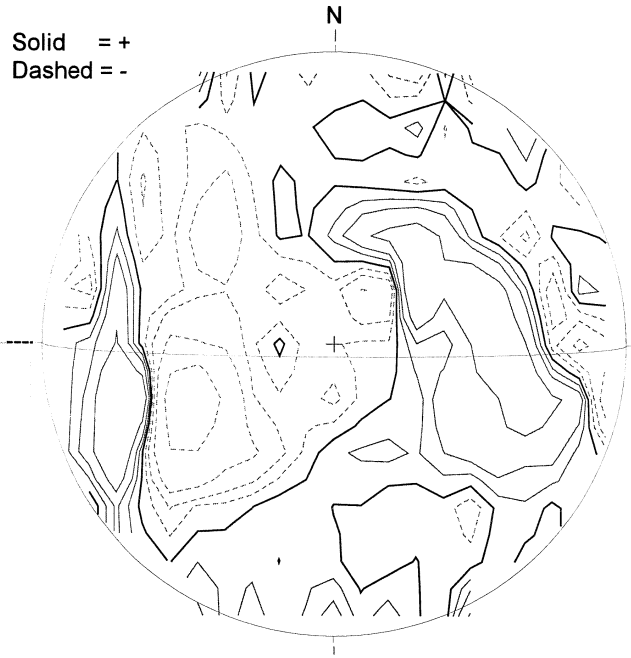

2257 UT

MT. WILSON MAGNETOGRAM

DeltaY = 13.0
DeltaX = 9.6

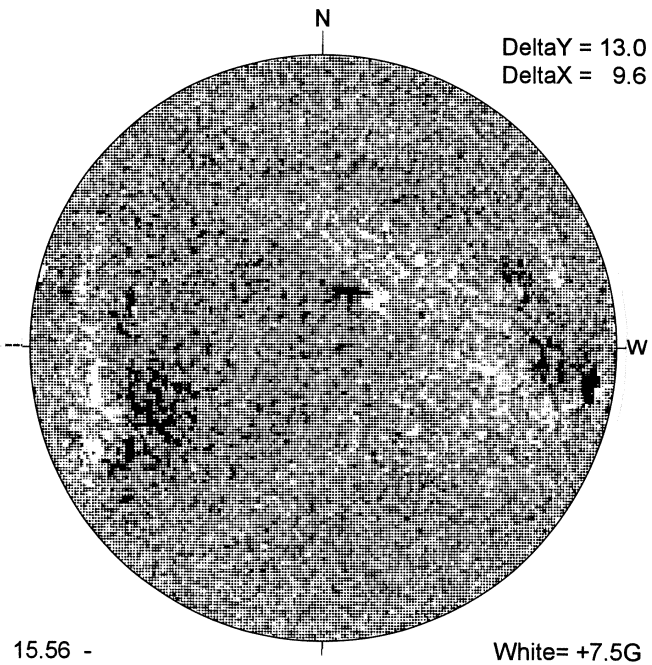

15.56 -
16.49 UT

White= +7.5G
Black = -7.5G

BIG BEAR H-ALPHA

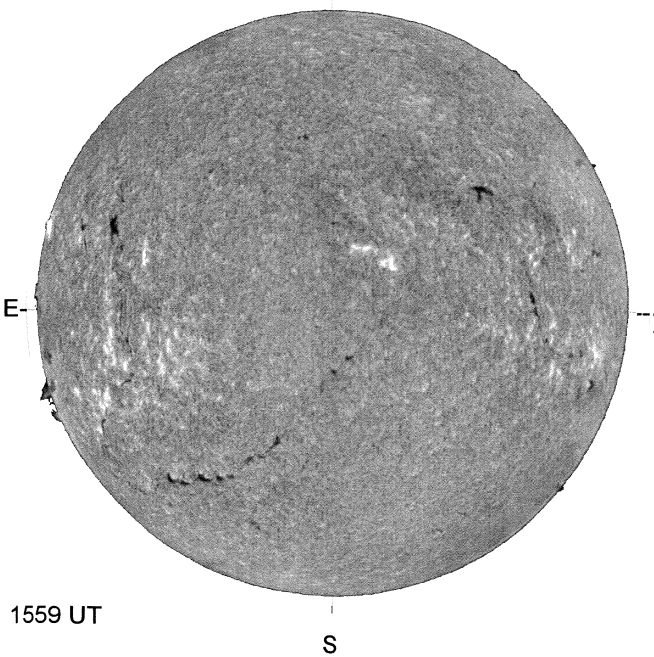

1559 UT

HOLLOMAN SUNSPOTS

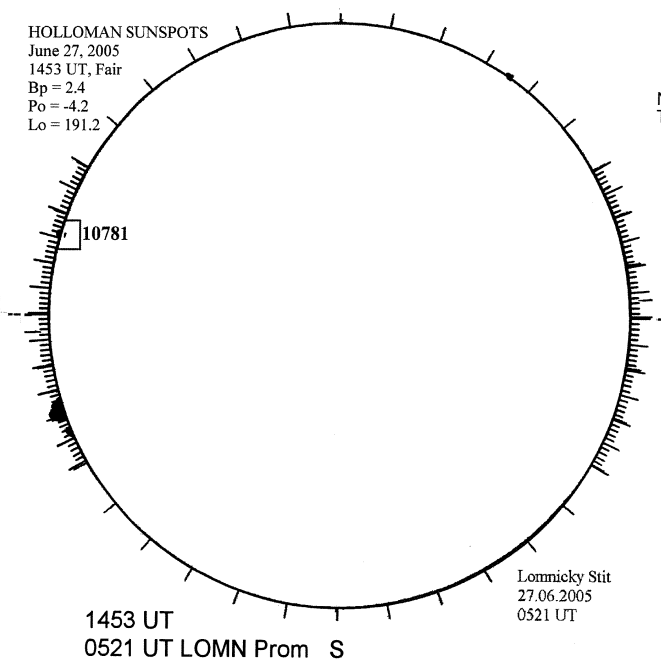

1453 UT
0521 UT LOMN Prom

LOMNICKY PEAK CORONA (1.04 Radii)

NSO / SACRAMENTO PEAK CORONAL DATA
TICK MARKS EVERY 10 MILLIONTHS

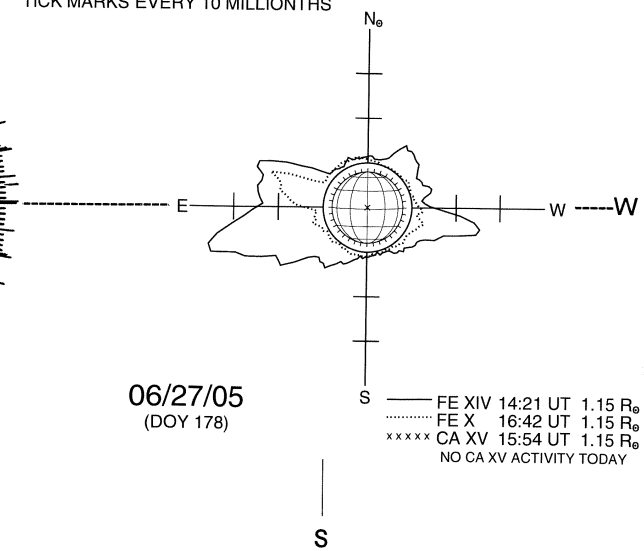

06/27/05
(DOY 178)

FE XIV 14:21 UT 1.15 R⊙
FE X 16:42 UT 1.15 R⊙
xxxxx CA XV 15:54 UT 1.15 R⊙
NO CA XV ACTIVITY TODAY