JUNE 22, 2005 (P= - 6.71, Bo = 1.85, Lo = 264.21)

KITT PEAK MAGNETOGRAM--SOLIS

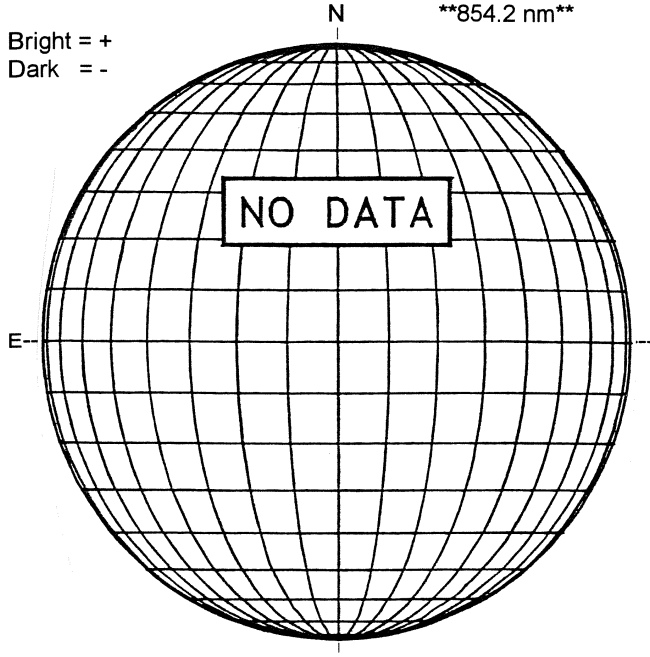

STANFORD MAGNETOGRAM

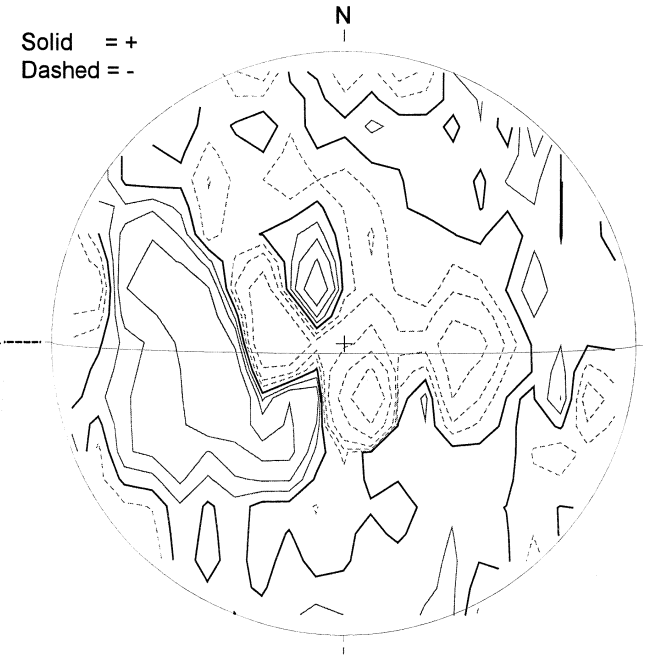

1953 UT

MT. WILSON MAGNETOGRAM

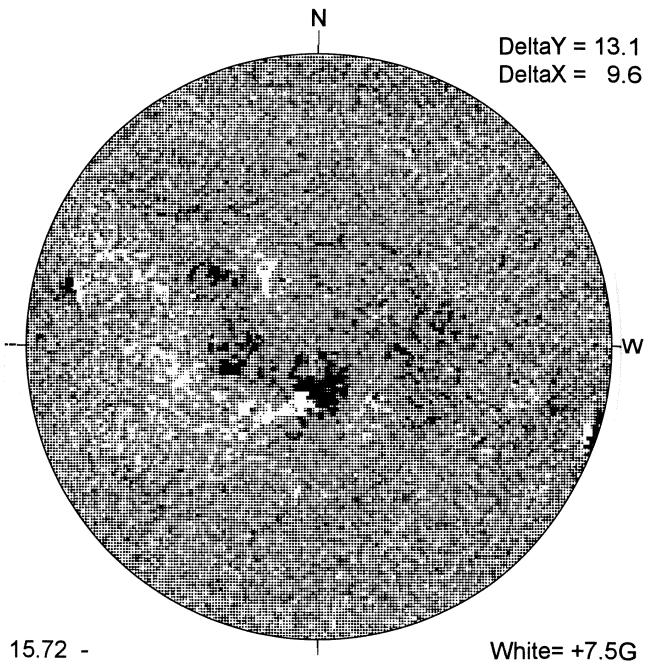

15.72 -
16.64 UT

BIG BEAR H-ALPHA

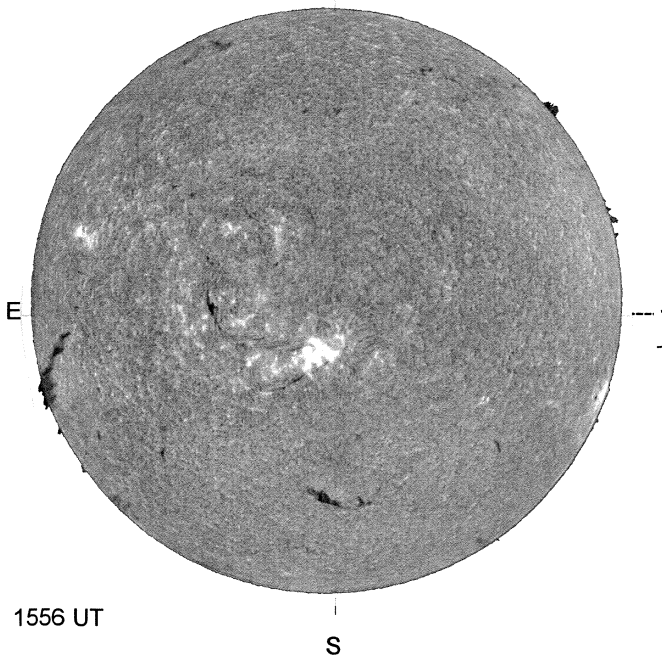

1556 UT

HOLLOMAN SUNSPOTS

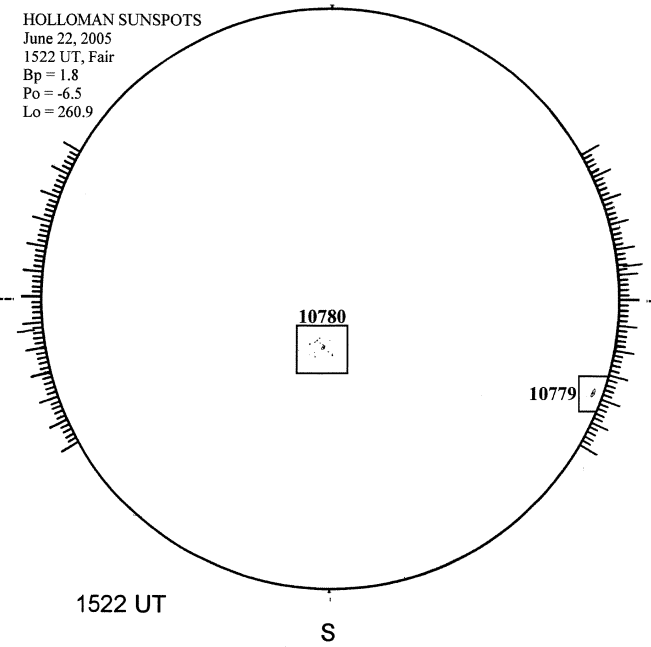

1522 UT
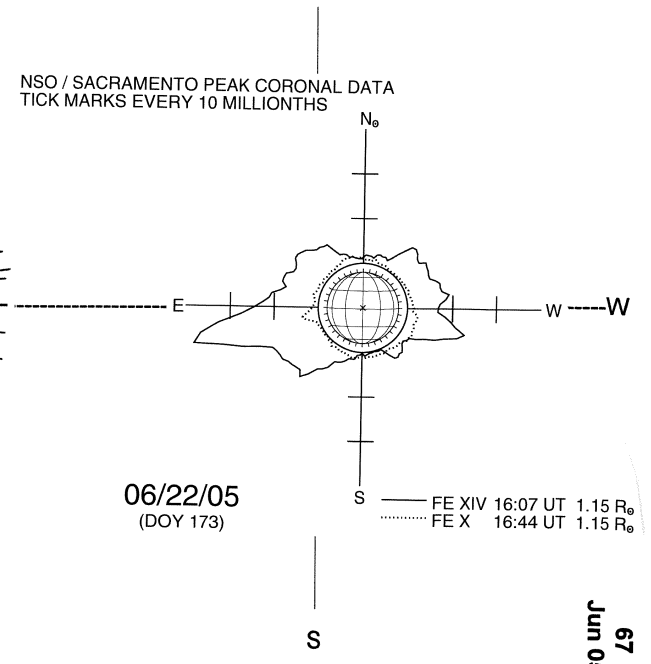
SACRAMENTO PEAK CORONA (1.15 Radii)----