JUNE 15, 2005 (P= - 9.77, Bo = 1.03, Lo = 356.87)

KITT PEAK MAGNETOGRAM--SOLIS

854.2 nm

Bright = +
Dark = -

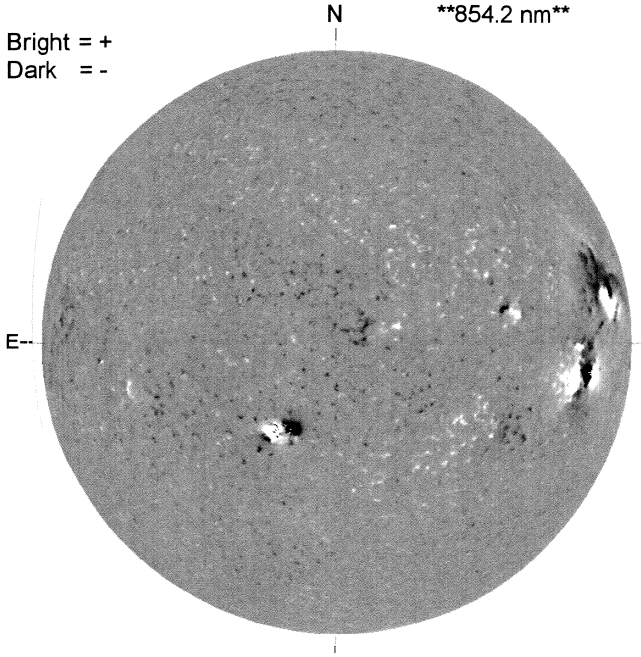

1653 UT

STANFORD MAGNETOGRAM

Solid = +
Dashed = -

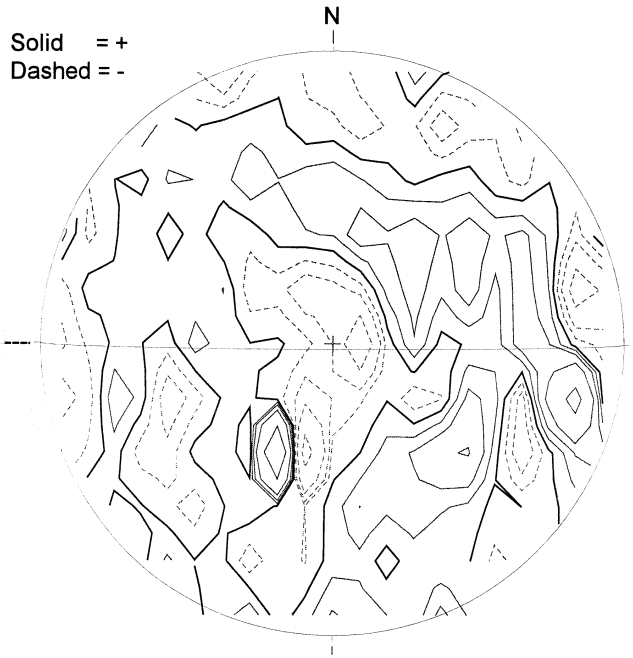

2012 UT

MT. WILSON MAGNETOGRAM

DeltaY = 13.1
DeltaX = 9.6

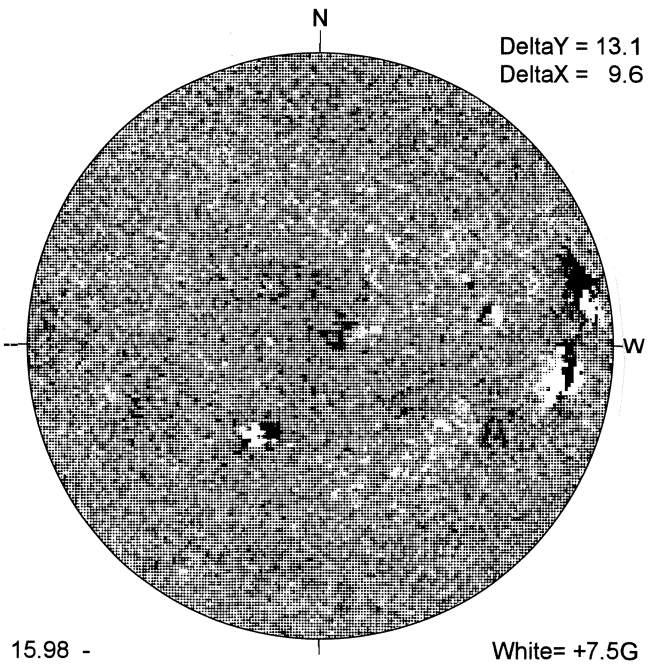

15.98 -
16.90 UT

White= +7.5G
Black = -7.5G

BIG BEAR H-ALPHA

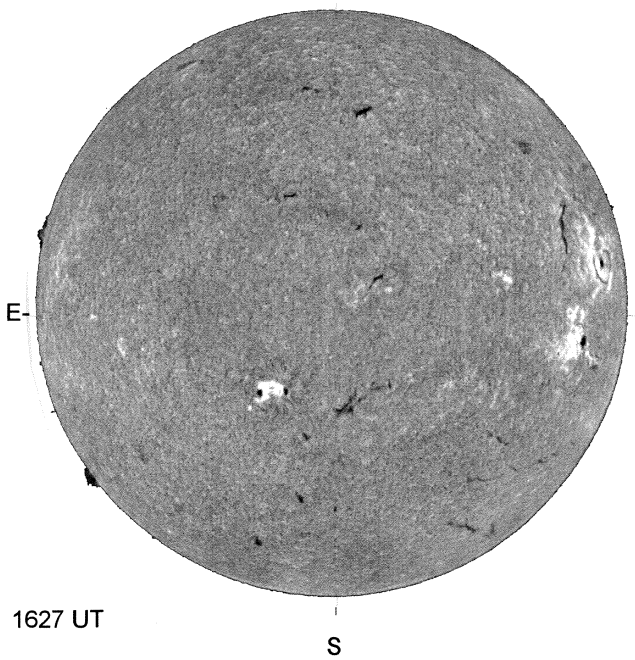

1627 UT

HOLLOMAN SUNSPOTS

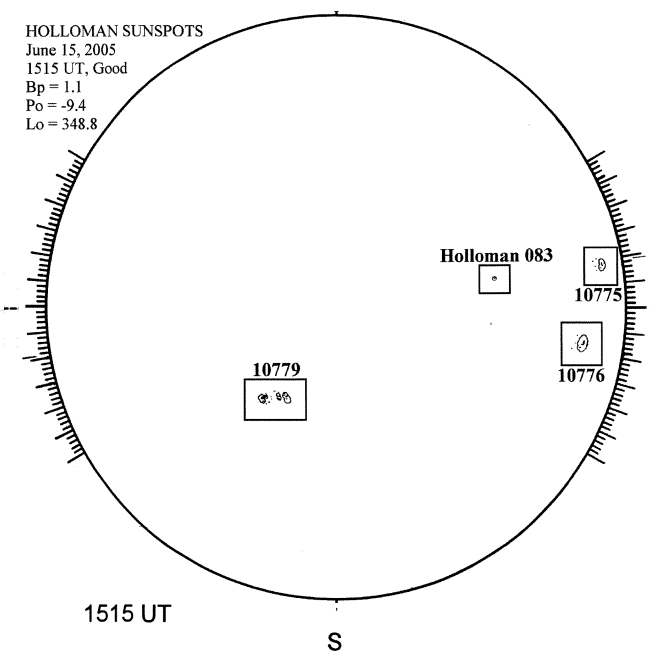

1515 UT

SACRAMENTO PEAK CORONA (1.15 Radii)----

NSO / SACRAMENTO PEAK CORONAL DATA
TICK MARKS EVERY 10 MILLIONTHS

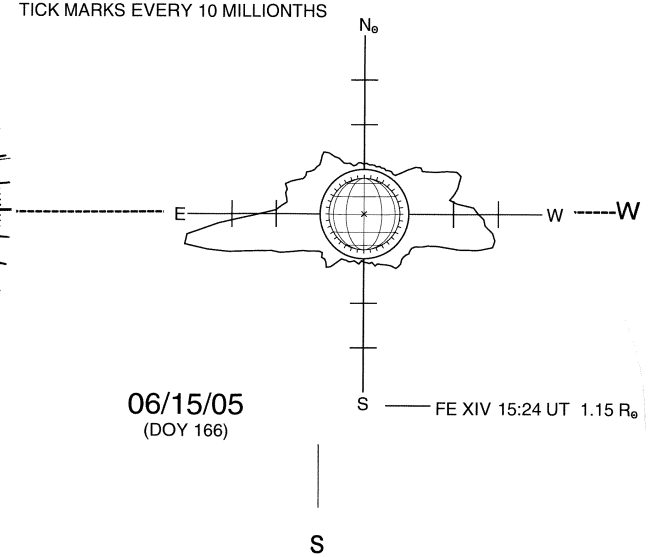

06/15/05
(DOY 166)

S