JUNE 14, 2005 (P= -10.20, Bo = 0.91, Lo = 10.11)

KITT PEAK MAGNETOGRAM--SOLIS

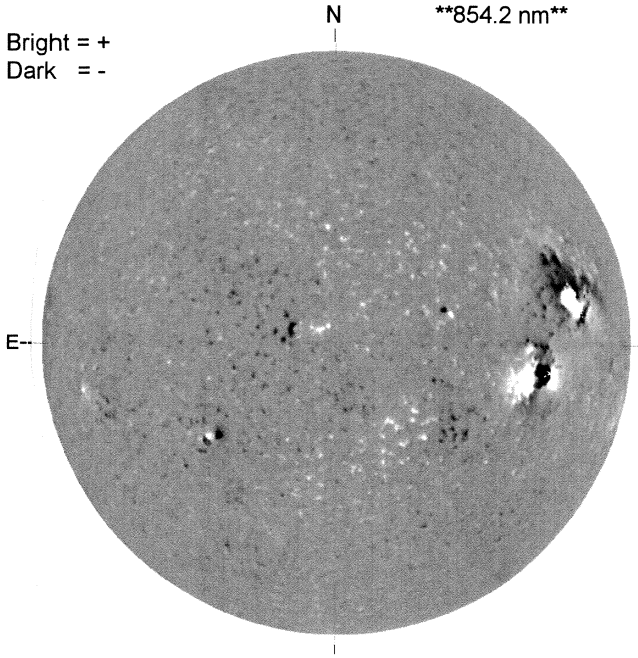

STANFORD MAGNETOGRAM

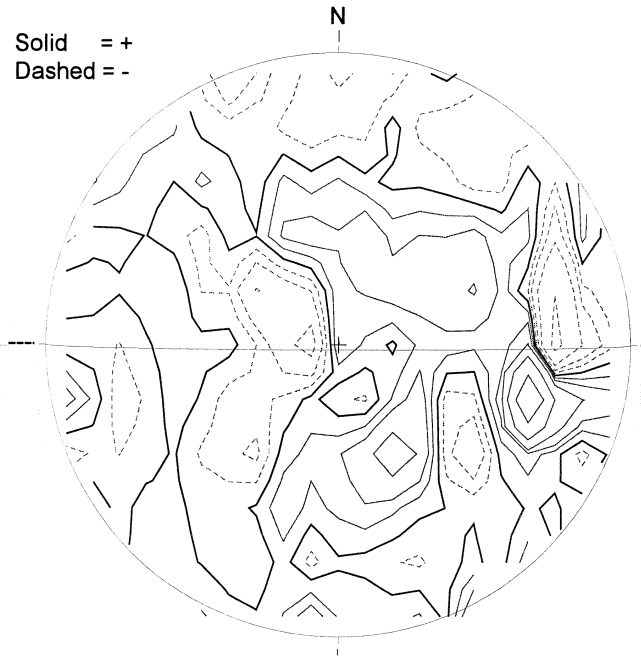

MT. WILSON MAGNETOGRAM

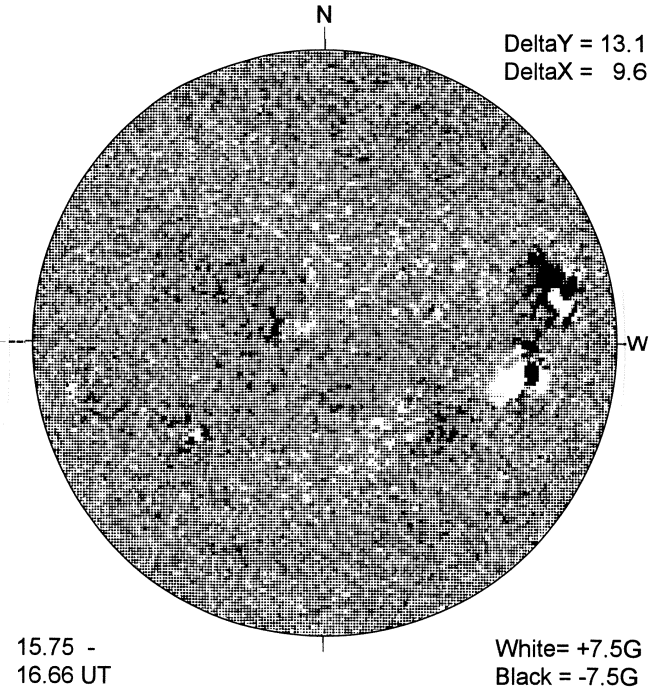

BIG BEAR H-ALPHA

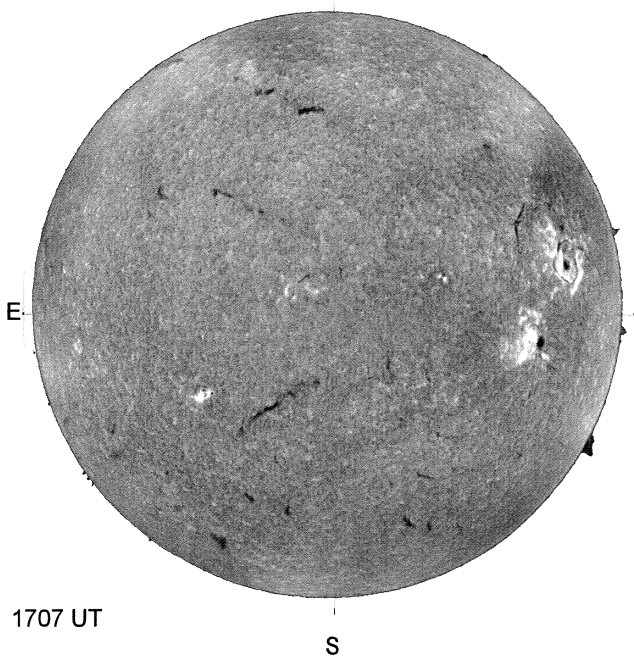

HOLLOMAN SUNSPOTS

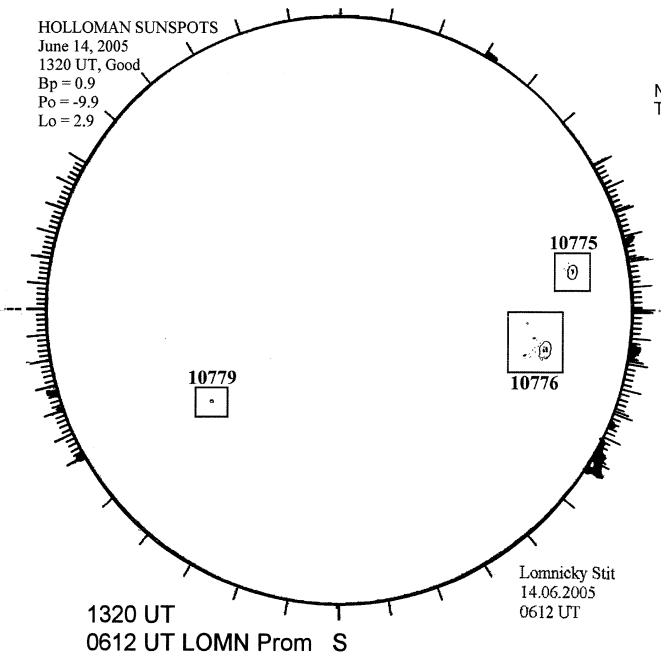
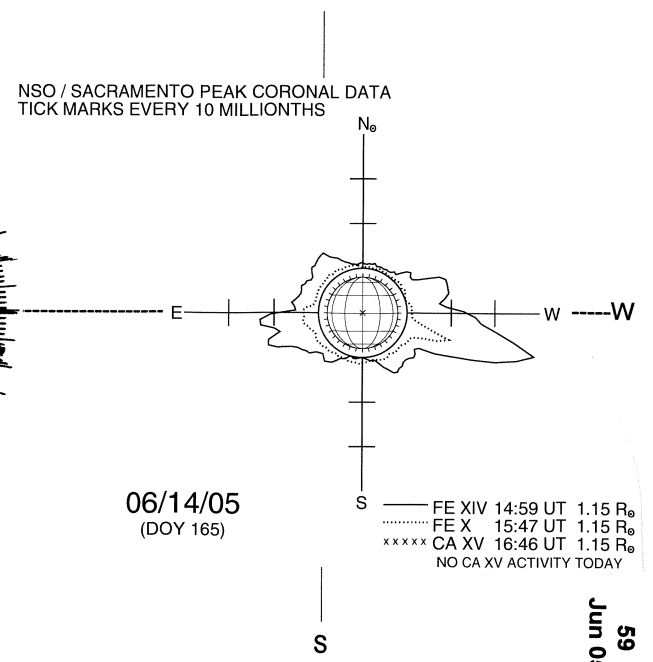
LOMNICKY PEAK CORONA (1.04 Radii)----