JUNE 13, 2005 (P= -10.62, Bo = 0.79, Lo = 23.35)

KITT PEAK MAGNETOGRAM--SOLIS

854.2 nm

Bright = +
Dark = -

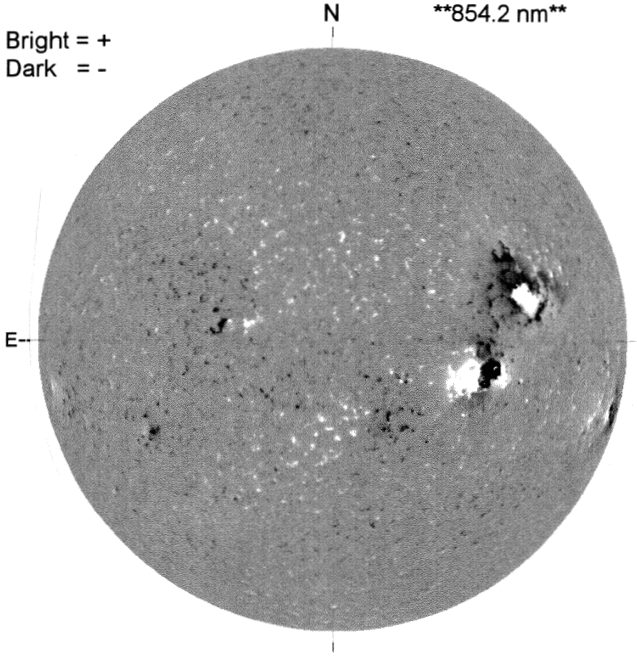

1527 UT

STANFORD MAGNETOGRAM

Solid = +
Dashed = -

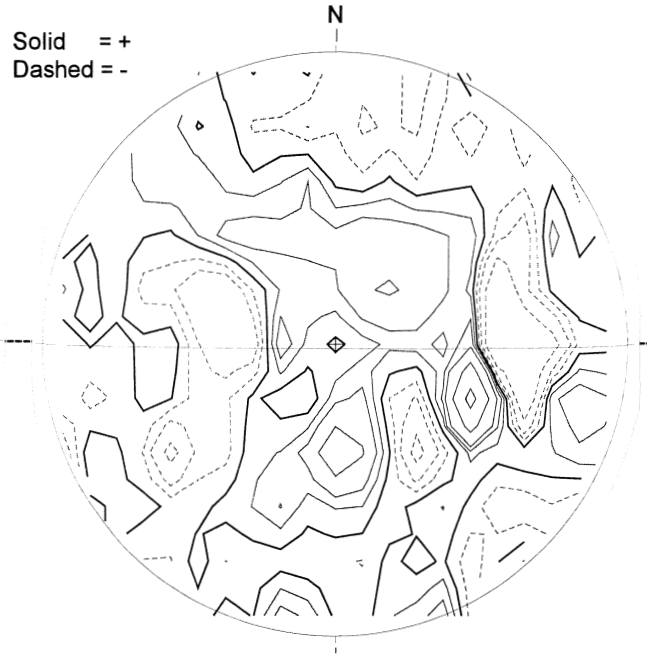

2303 UT

MT. WILSON MAGNETOGRAM

DeltaY = 13.1
DeltaX = 9.6

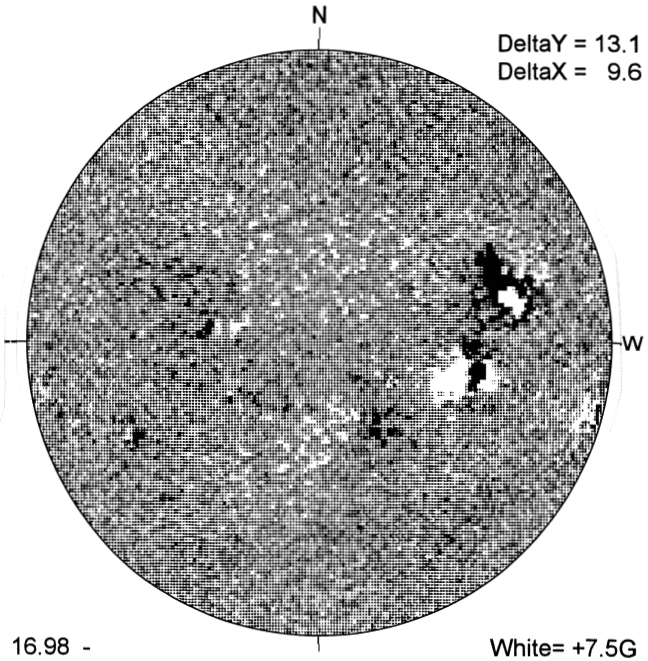

16.98 -
17.90 UT

White= +7.5G
Black = -7.5G

BIG BEAR H-ALPHA

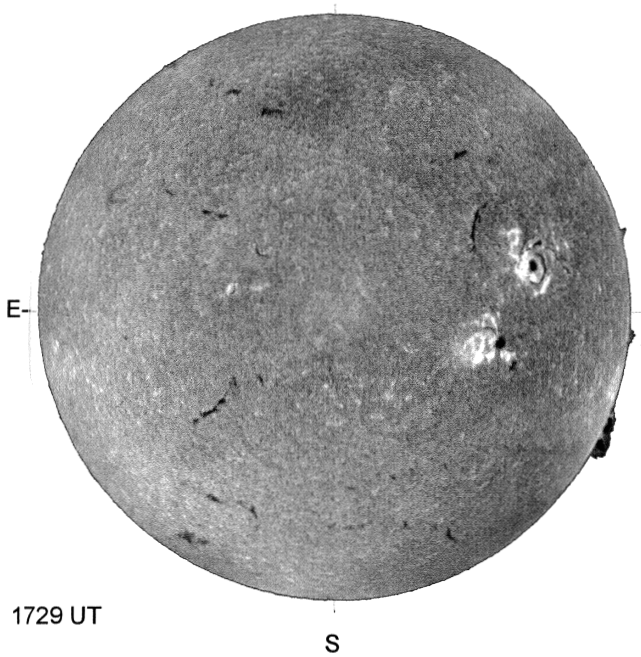

1729 UT

HOLLOMAN SUNSPOTS

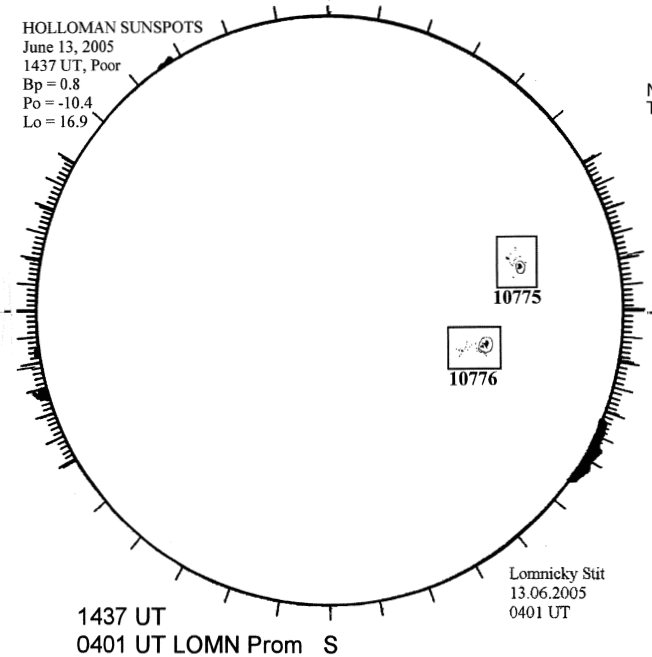

1437 UT
0401 UT LOMN Prom
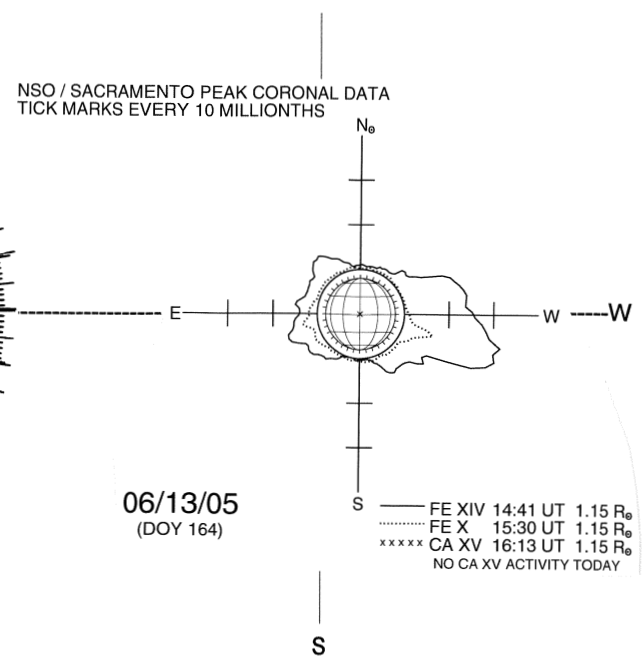
LOMNICKY PEAK CORONA (1.04 Radii)