JUNE 7, 2005 (P= -13.09, Bo = 0.07, Lo = 102.76)

KITT PEAK MAGNETOGRAM--SOLIS

854.2 nm

Bright = +
Dark = -

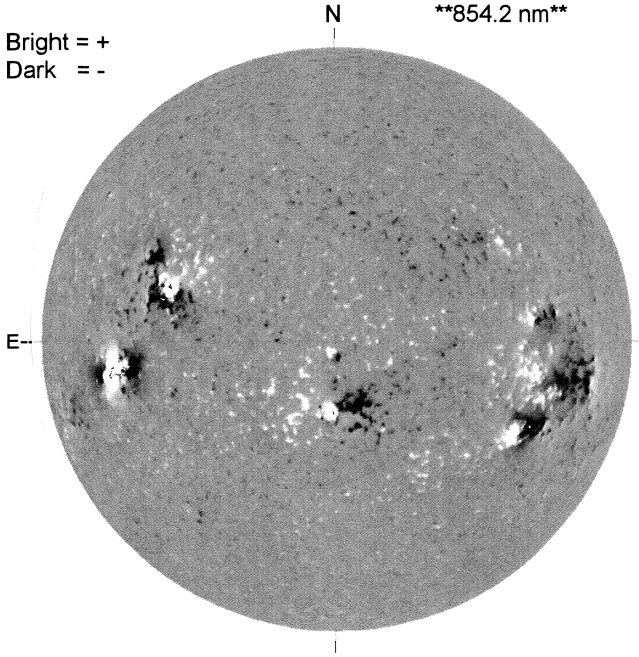

1832 UT

STANFORD MAGNETOGRAM

Solid = +
Dashed = -

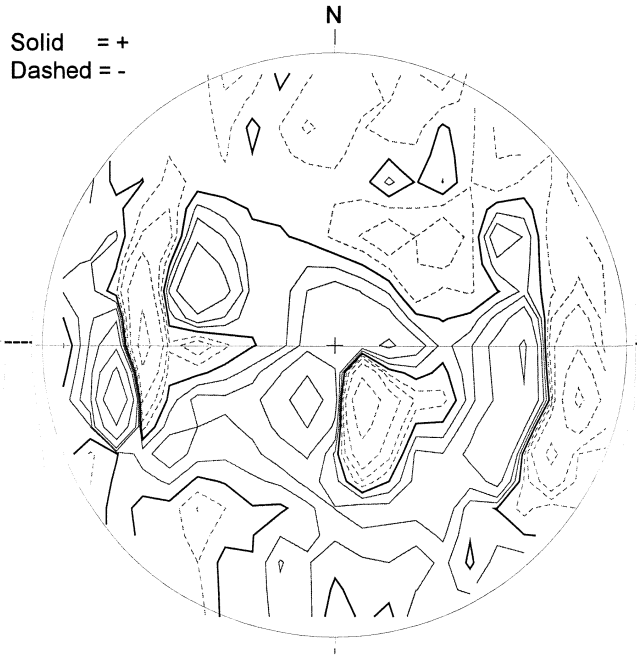

1938 UT

MT. WILSON MAGNETOGRAM

DeltaY = 13.1
DeltaX = 9.6

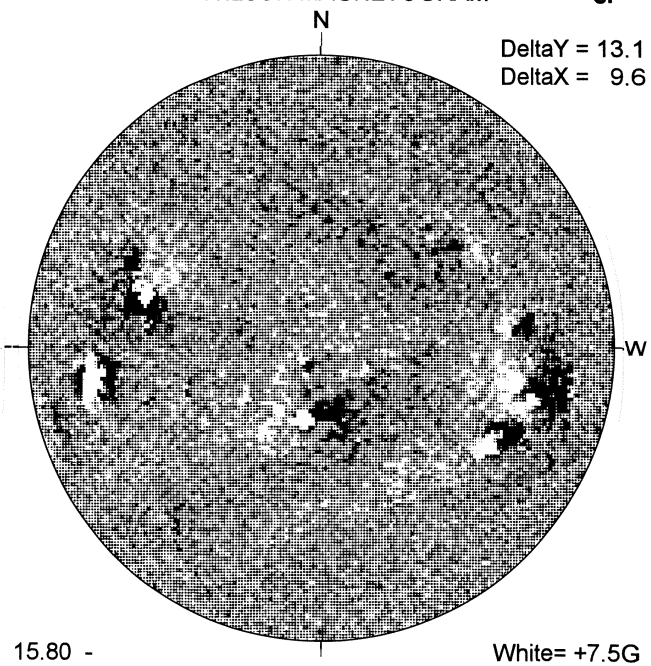

15.80 -
16.72 UT

White= +7.5G
Black = -7.5G

BIG BEAR H-ALPHA

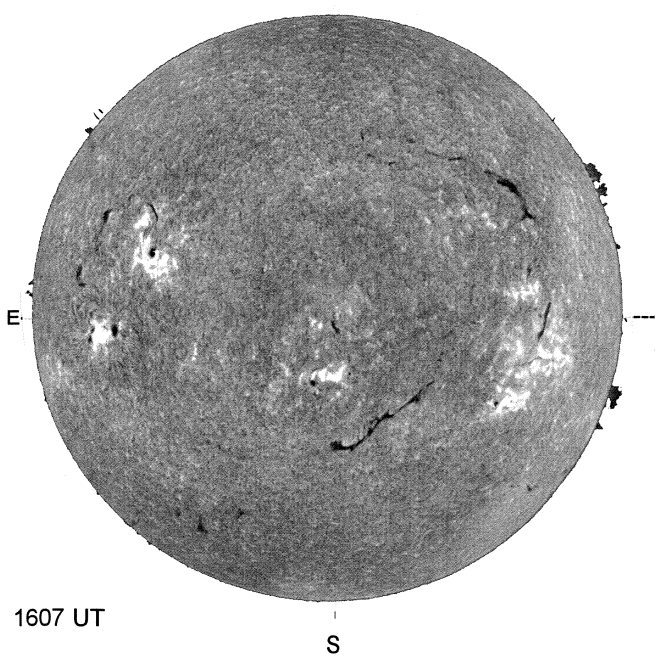

1607 UT

HOLLOMAN SUNSPOTS

HOLLOMAN SUNSPOTS
June 07, 2005
1400 UT, Good
Bp = 0.1
Po = -12.8
Lo = 96.0

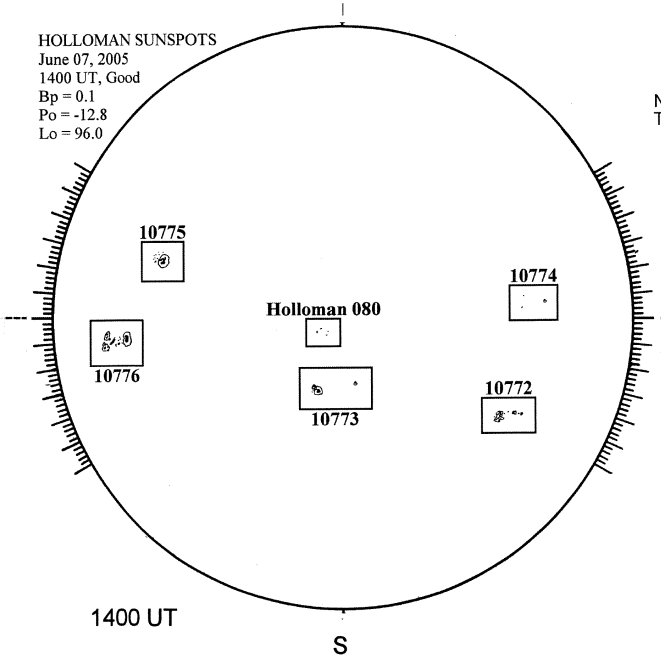

1400 UT

SACRAMENTO PEAK CORONA (1.15 Radii)

NSO / SACRAMENTO PEAK CORONAL DATA
TICK MARKS EVERY 10 MILLIONTHS

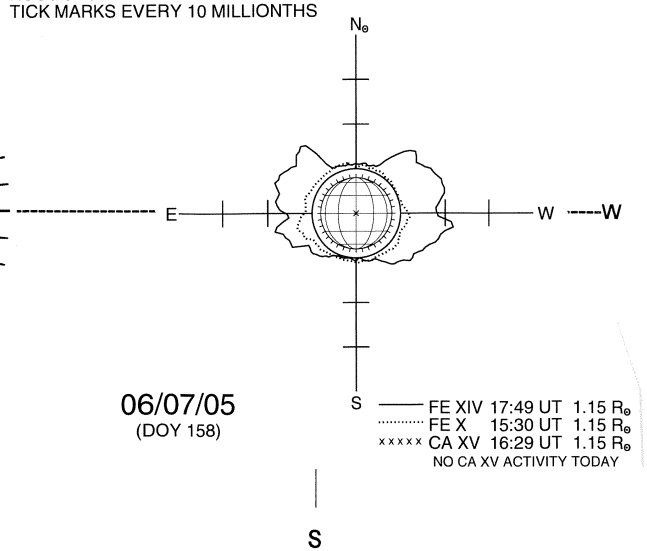

06/07/05
(DOY 158)

FE XIV 17:49 UT 1.15 R⊙
FE X 15:30 UT 1.15 R⊙
xxxxx CA XV 16:29 UT 1.15 R⊙
NO CA XV ACTIVITY TODAY