JUNE 3, 2005 (P= -14.66, Bo = -0.42, Lo = 155.70)

KITT PEAK MAGNETOGRAM--SOLIS

854.2 nm

Bright = +
Dark = -

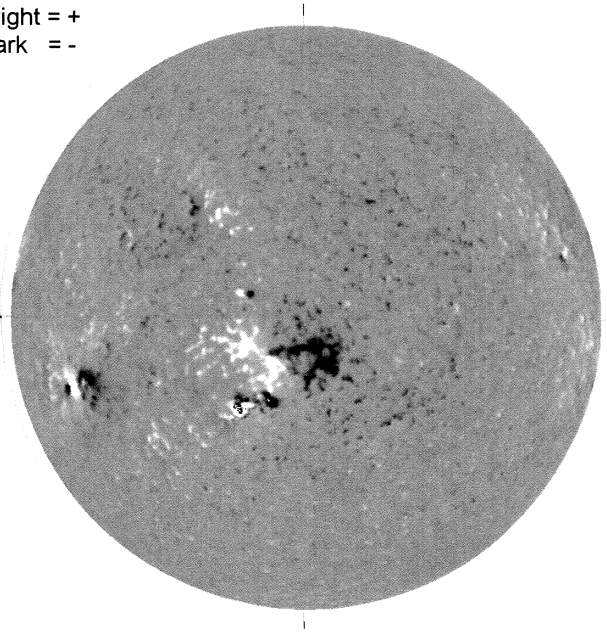

1636 UT

STANFORD MAGNETOGRAM

Solid = +
Dashed = -

1918 UT

MT. WILSON MAGNETOGRAM

DeltaY = 13.1
DeltaX = 9.6

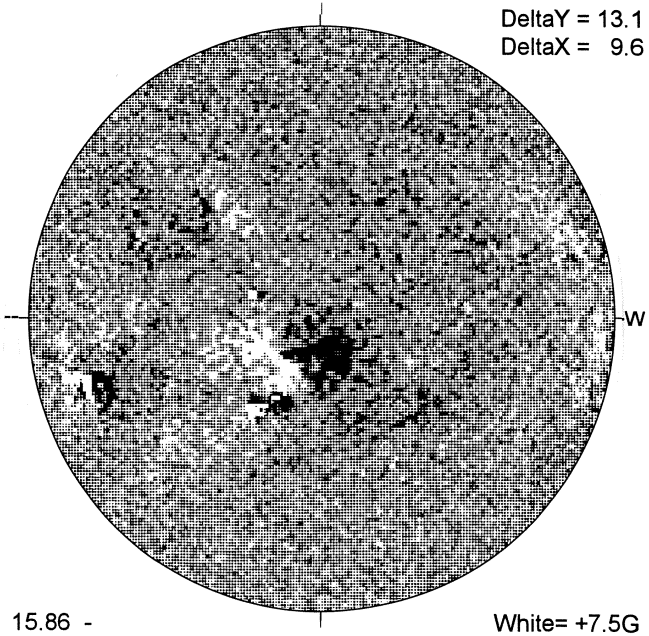

15.86 -
16.78 UT

White= +7.5G
Black = -7.5G

BIG BEAR H-ALPHA

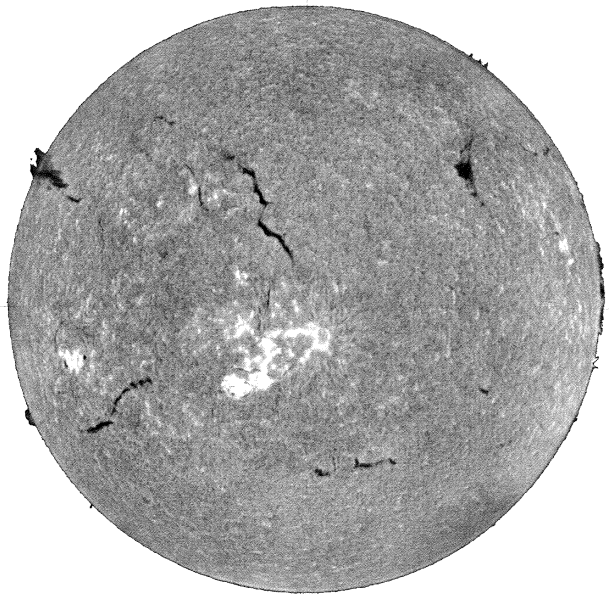

1626 UT

S

HOLLOMAN SUNSPOTS

HOLLOMAN SUNSPOTS
June 03, 2005
1408 UT, Good
Bp = -0.3
Po = -14.4
Lo = 149.1

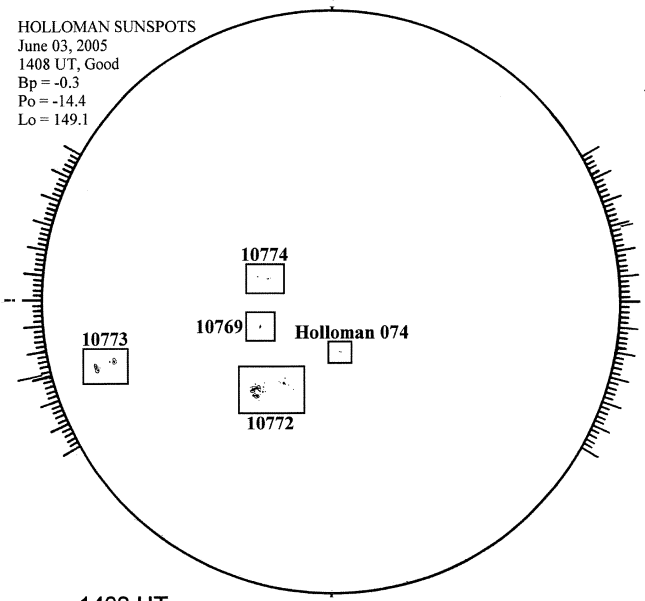

1408 UT

S

SACRAMENTO PEAK CORONA (1.15 Radii)----

NSO / SACRAMENTO PEAK CORONAL DATA
TICK MARKS EVERY 10 MILLIONTHS

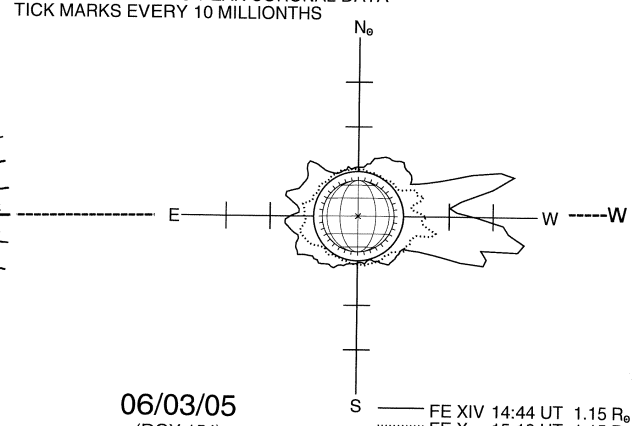

06/03/05
(DOY 154)

FE XIV 14:44 UT 1.15 R⊙
FE X 15:13 UT 1.15 R⊙
xxxxx CA XV 15:51 UT 1.15 R⊙
NO CA XV ACTIVITY TODAY

S