JUNE 1, 2005 (P= -15.41, Bo = -0.66, Lo = 182.16)

KITT PEAK MAGNETOGRAM--SOLIS

854.2 nm

Bright = +
Dark = -

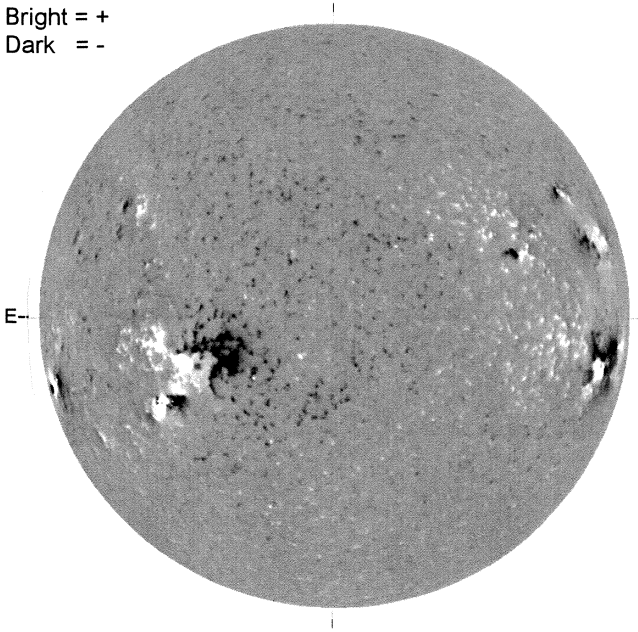

1915 UT

STANFORD MAGNETOGRAM

Solid = +
Dashed = -

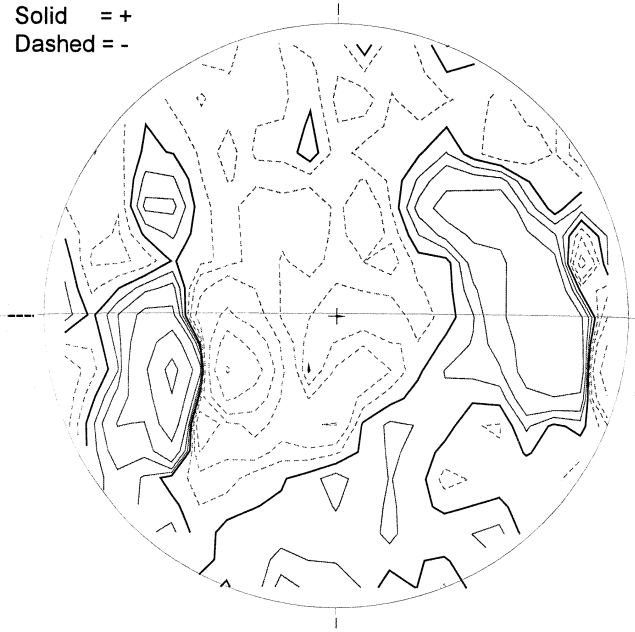

1942 UT

MT. WILSON MAGNETOGRAM

DeltaY = 13.1
DeltaX = 9.6

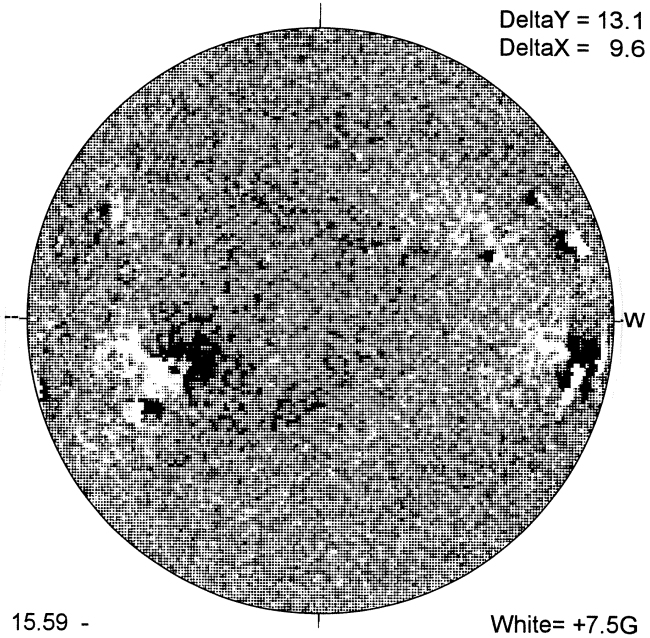

15.59 -
16.52 UT

White= +7.5G
Black = -7.5G

BIG BEAR H-ALPHA

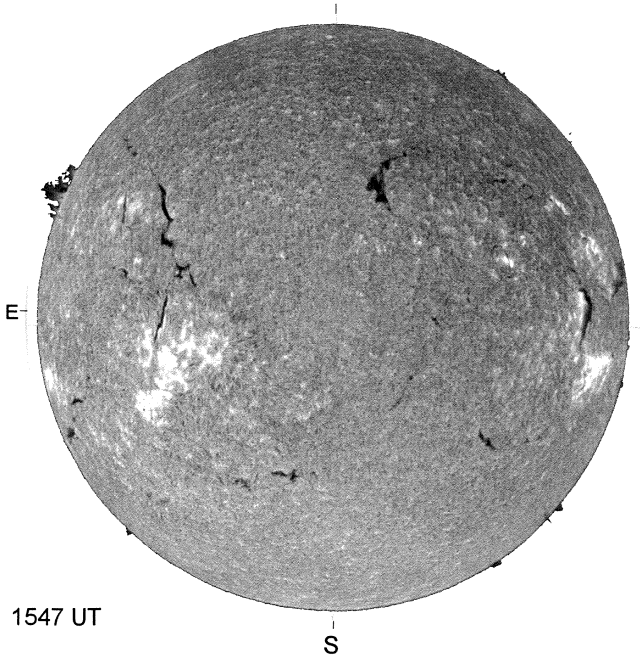

1547 UT

HOLLOMAN SUNSPOTS

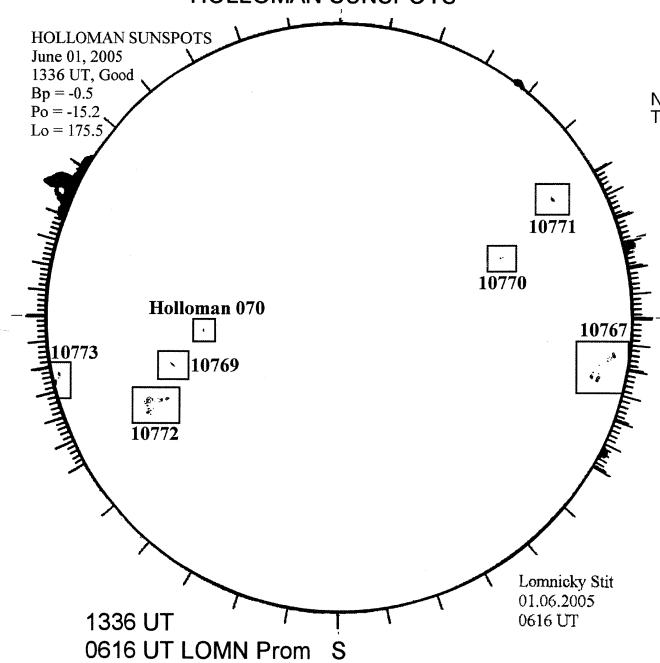

1336 UT
0616 UT LOMN Prom

SACRAMENTO PEAK CORONA (1.15 Radii)

NSO / SACRAMENTO PEAK CORONAL DATA
TICK MARKS EVERY 10 MILLIONTHS

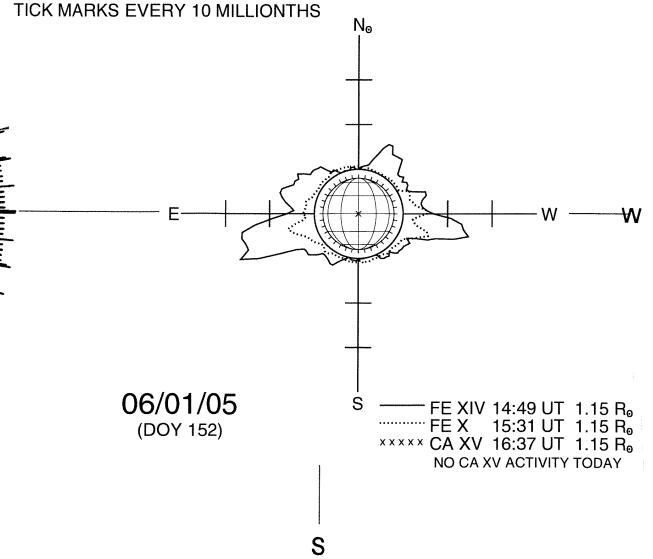

06/01/05
(DOY 152)

FE XIV 14:49 UT 1.15 R☉
FE X 15:31 UT 1.15 R☉
xxxxx CA XV 16:37 UT 1.15 R☉
NO CA XV ACTIVITY TODAY