MAY 31, 2005 (P= -15.78, Bo = -0.78, Lo = 195.40)

KITT PEAK MAGNETOGRAM--SOLIS

854.2 nm

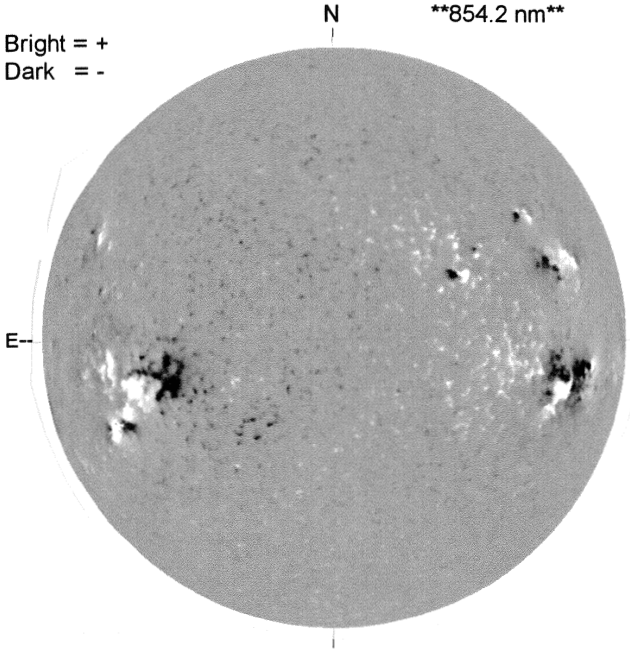

STANFORD MAGNETOGRAM

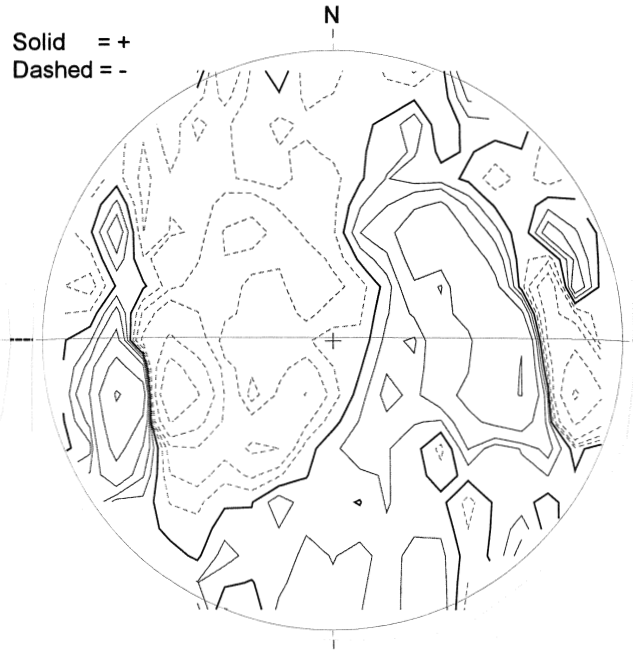

MT. WILSON MAGNETOGRAM

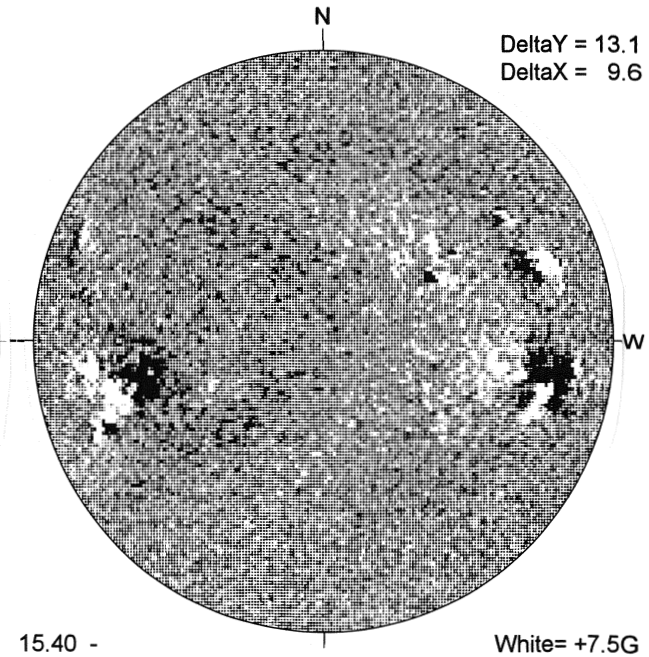

BIG BEAR H-ALPHA

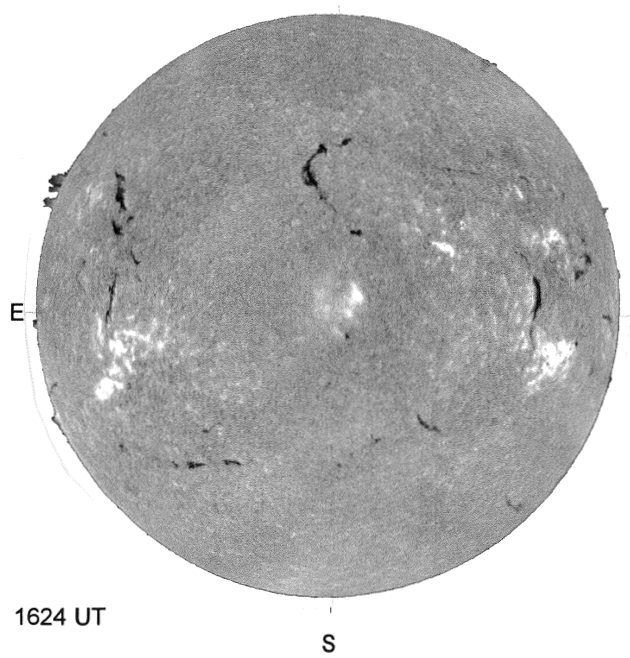

HOLLOMAN SUNSPOTS

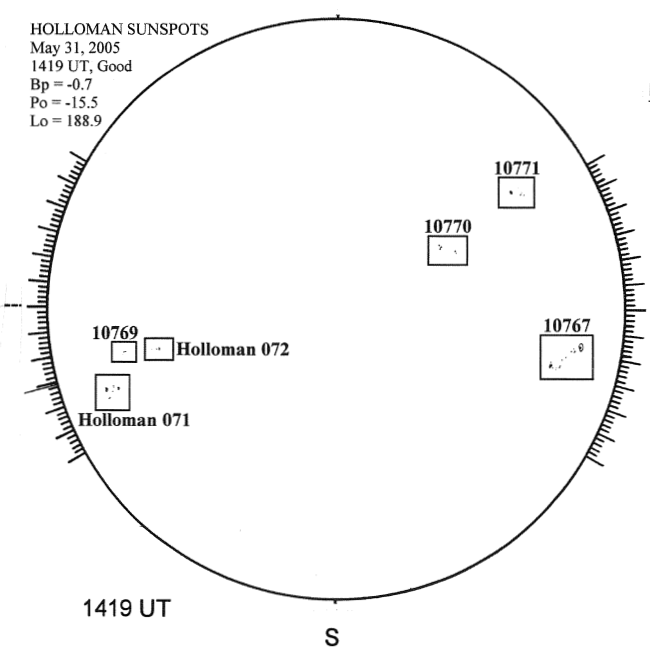
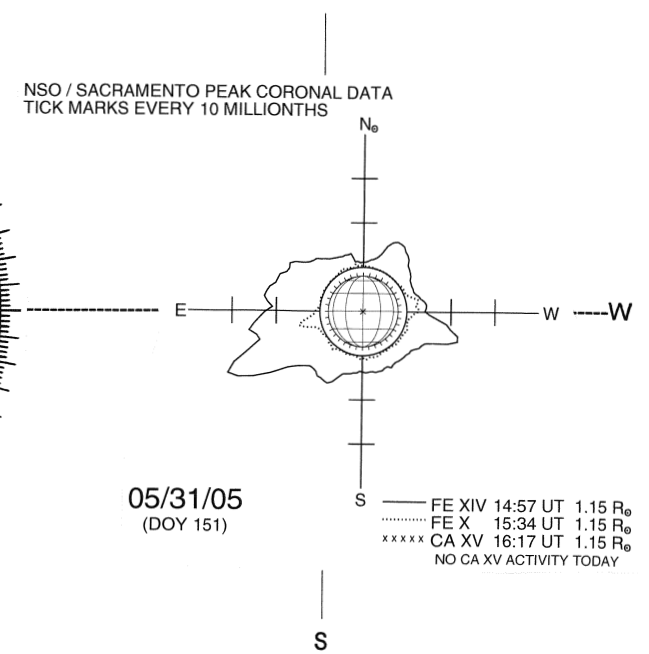
SACRAMENTO PEAK CORONA (1.15 Radii)----