MAY 30, 2005 (P= -16.15, Bo = -0.90, Lo = 208.63)

KITT PEAK MAGNETOGRAM—SOLIS

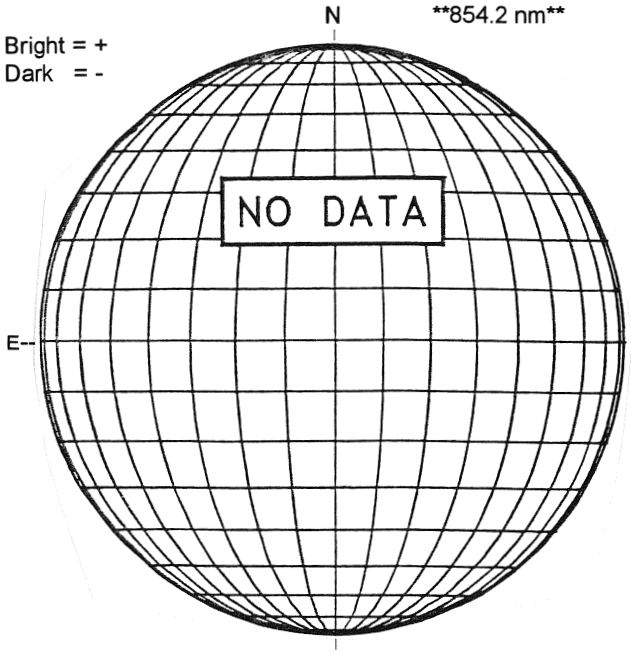

STANFORD MAGNETOGRAM

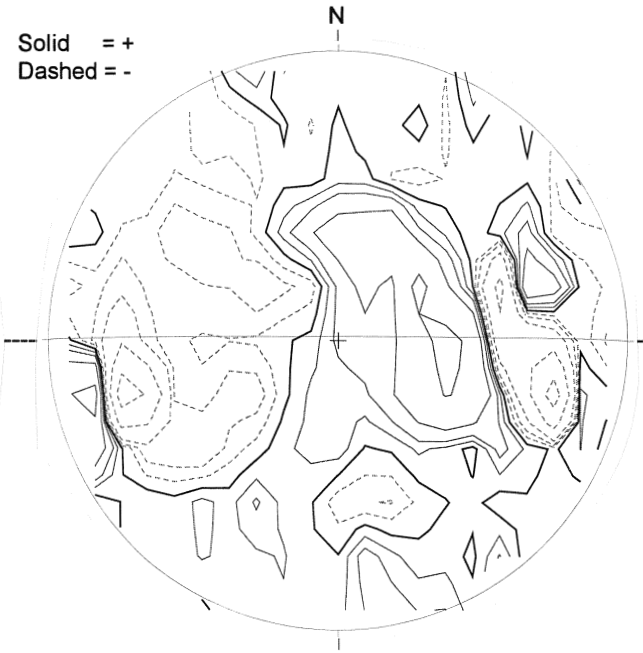

MT. WILSON MAGNETOGRAM

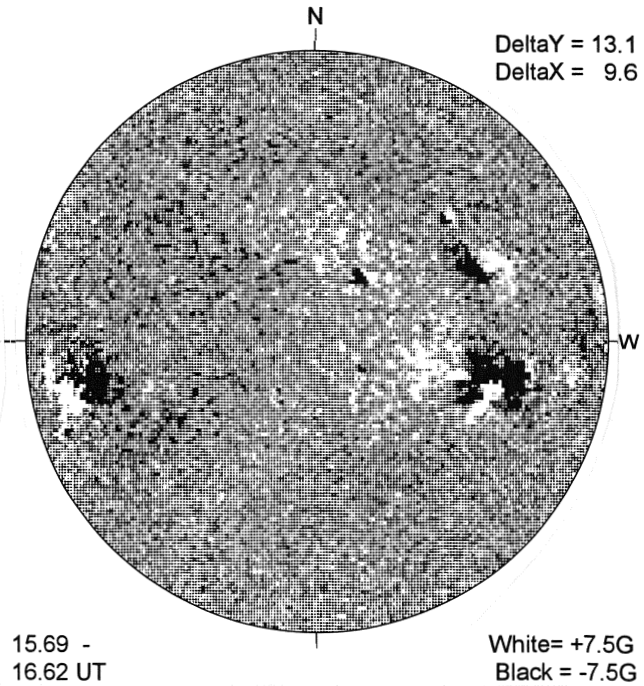

----- KANZELHOHE H-ALPHA

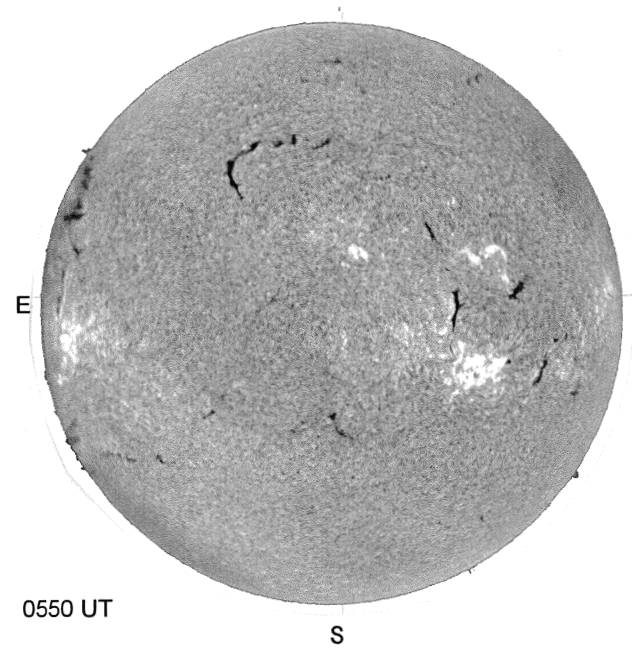

HOLLOMAN SUNSPOTS

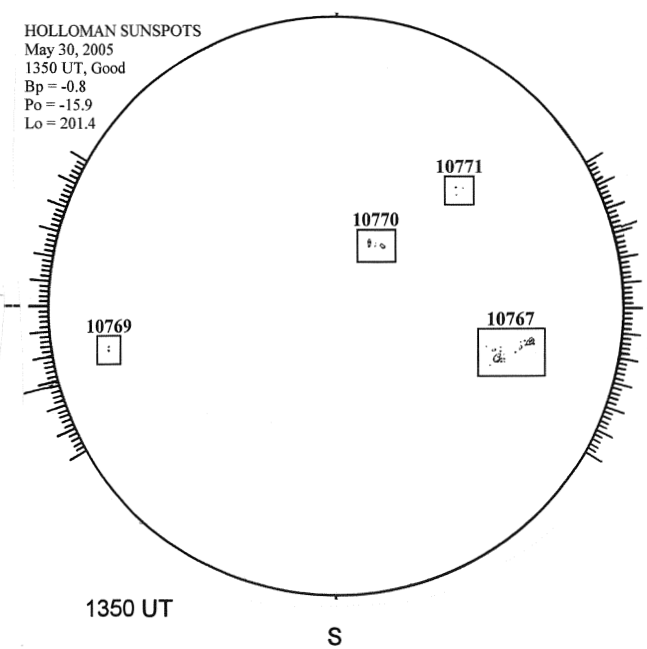
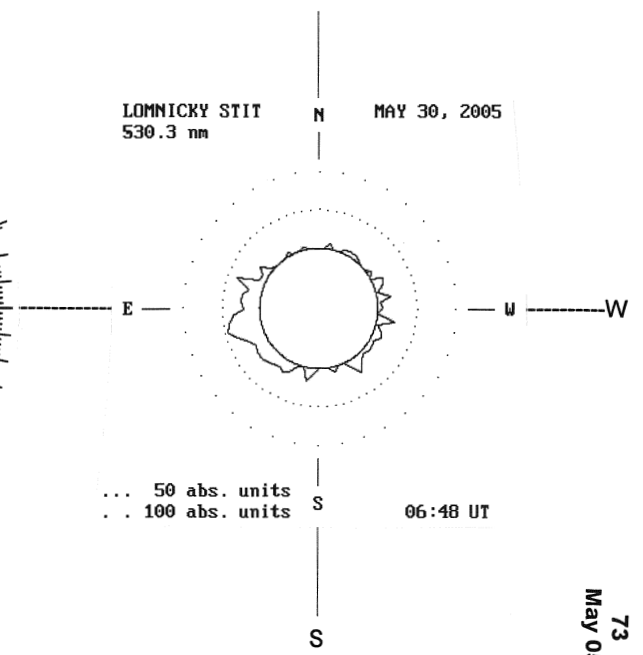
LOMNICKY PEAK CORONA (1.04 Radii)----