MAY 23, 2005 (P= -18.56, Bo = -1.73, Lo = 301.25)

KITT PEAK MAGNETOGRAM--SOLIS

854.2 nm

Bright = +
Dark = -

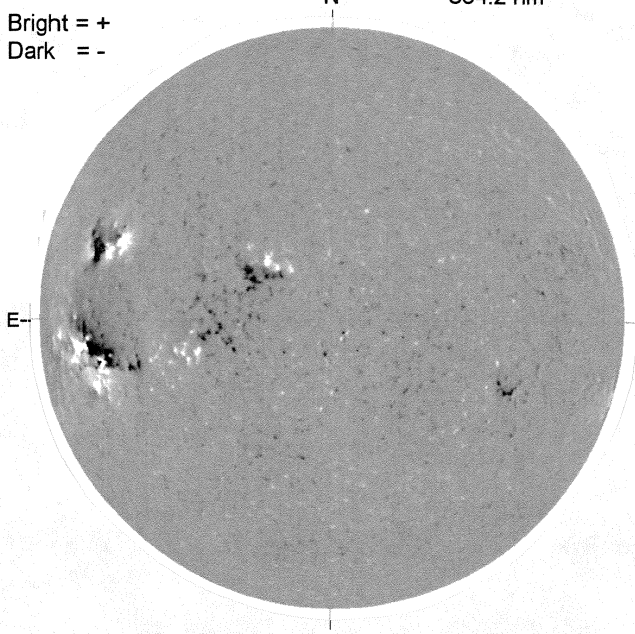

1843 UT

STANFORD MAGNETOGRAM

Solid = +
Dashed = -

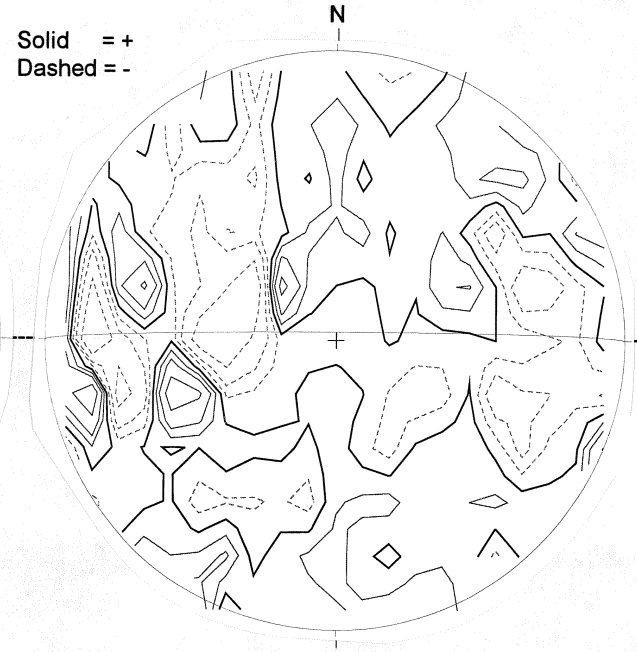

1707 UT

MT. WILSON MAGNETOGRAM

DeltaY = 13.1
DeltaX = 9.6

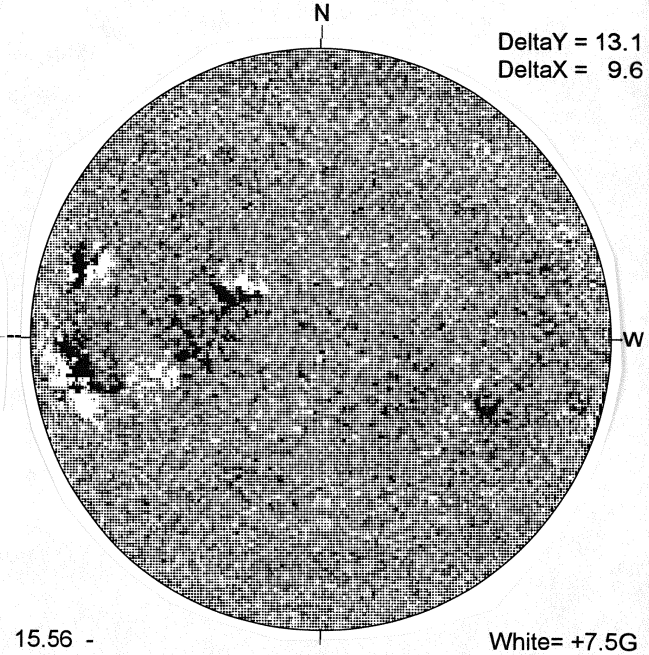

15.56 -
16.49 UT

White= +7.5G
Black = -7.5G

BIG BEAR H-ALPHA

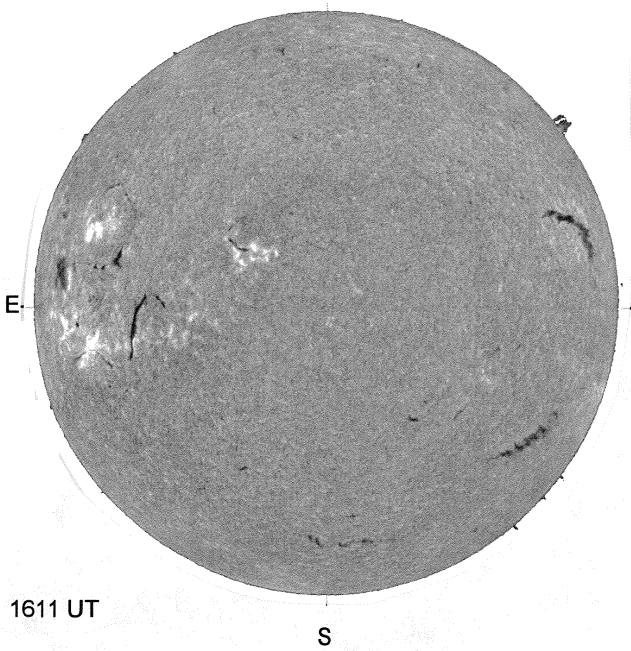

1611 UT

HOLLOMAN SUNSPOTS

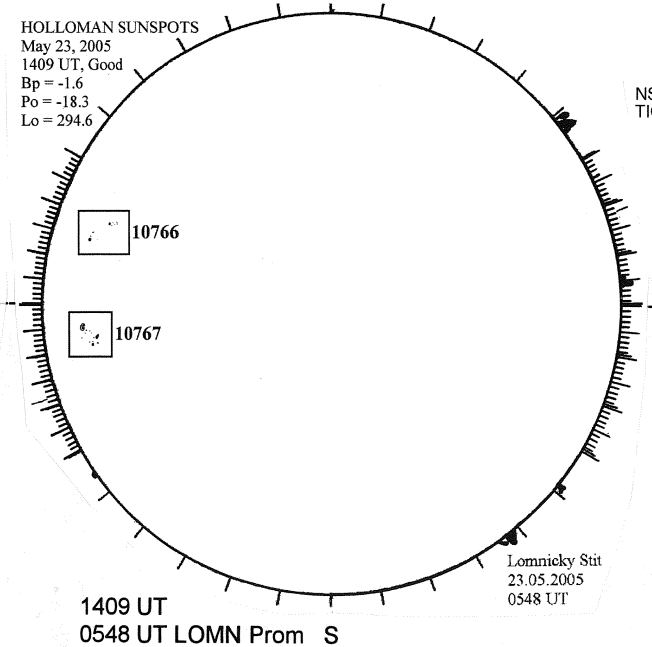

1409 UT
0548 UT LOMN Prom S

SACRAMENTO PEAK CORONA (1.15 Radii)

NSO / SACRAMENTO PEAK CORONAL DATA
TICK MARKS EVERY 10 MILLIONTHS

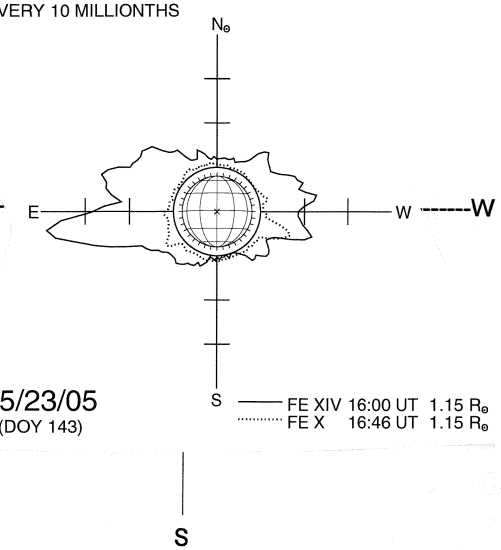

05/23/05
(DOY 143)

S