**MAY 20, 2005 ( P= -19.50, Bo = -2.08, Lo = 340.94)**

KITT PEAK MAGNETOGRAM--SOLIS

**854.2 nm**

Bright = +
Dark = -

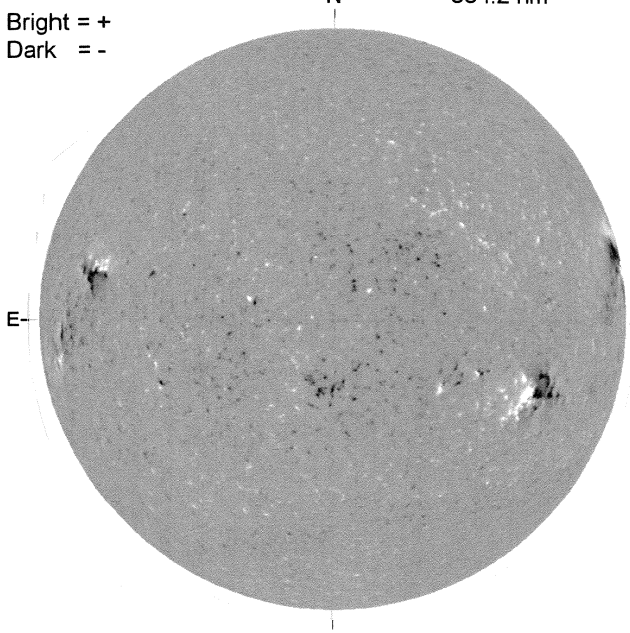


1700 UT

STANFORD MAGNETOGRAM

Solid = +
Dashed = -

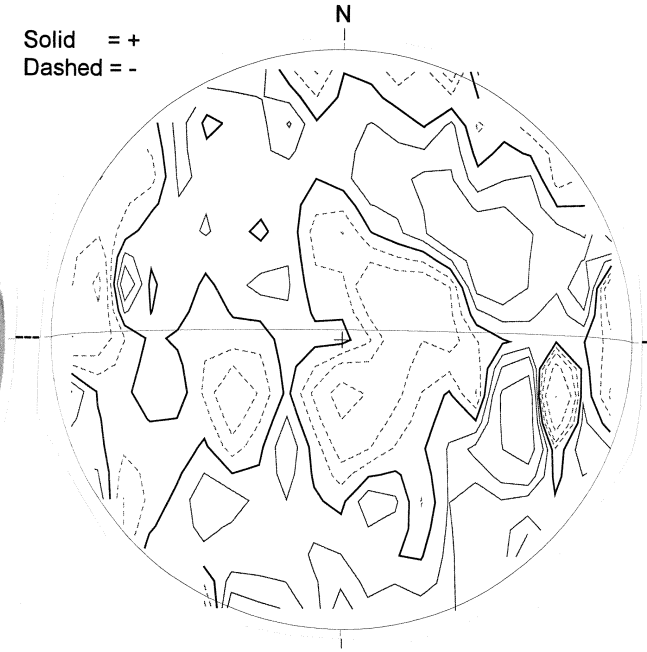


1732 UT

MT. WILSON MAGNETOGRAM

DeltaY = 13.1
DeltaX = 9.6

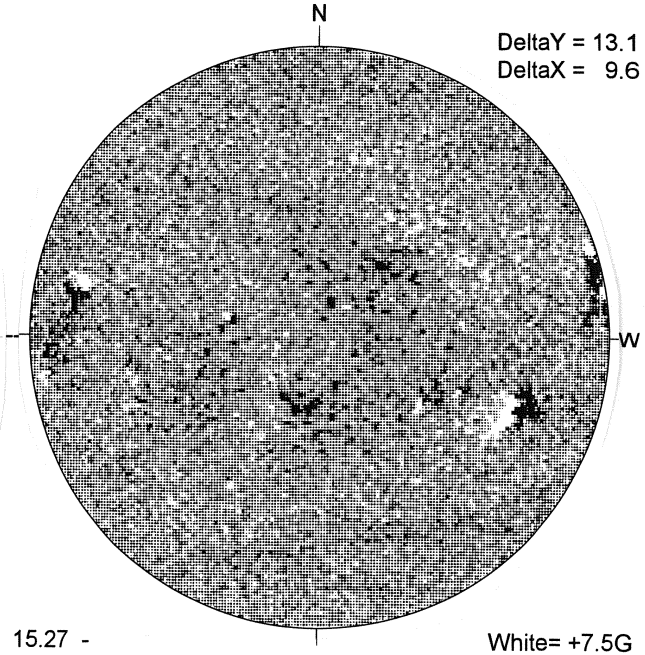


15.27 -
16.20 UT

White= +7.5G
Black = -7.5G

---- BIG BEAR H-ALPHA

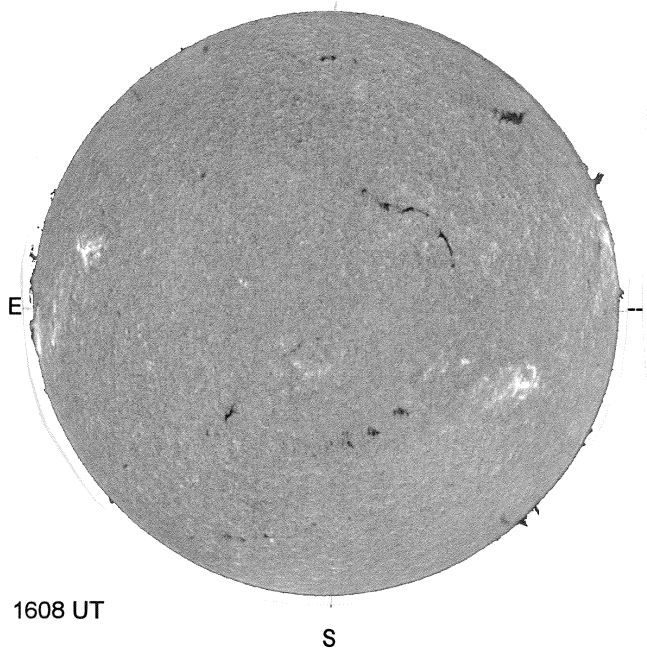


1608 UT

HOLLOMAN SUNSPOTS

HOLLOMAN SUNSPOTS
May 20, 2005
1401 UT, Good
Bp = -2.0
Po = -19.3
Lo = 334.3

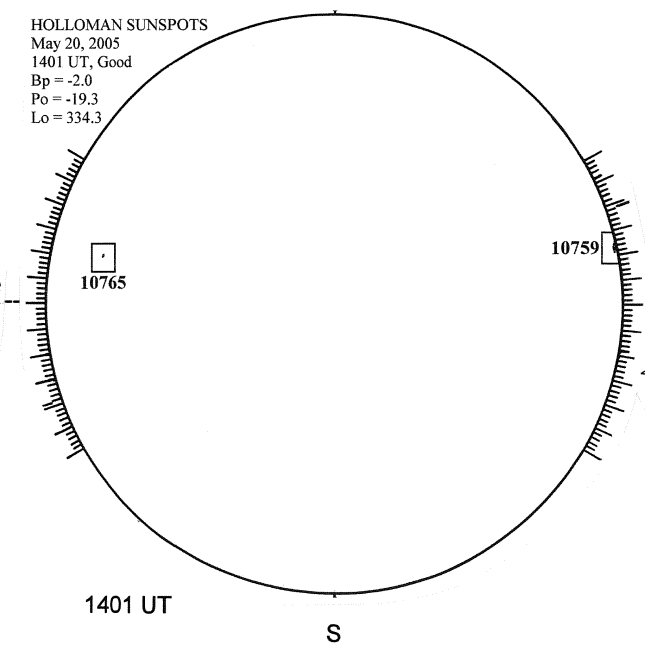


1401 UT

SACRAMENTO PEAK CORONA (1.15 Radii)----

NSO / SACRAMENTO PEAK CORONAL DATA
TICK MARKS EVERY 10 MILLIONTHS

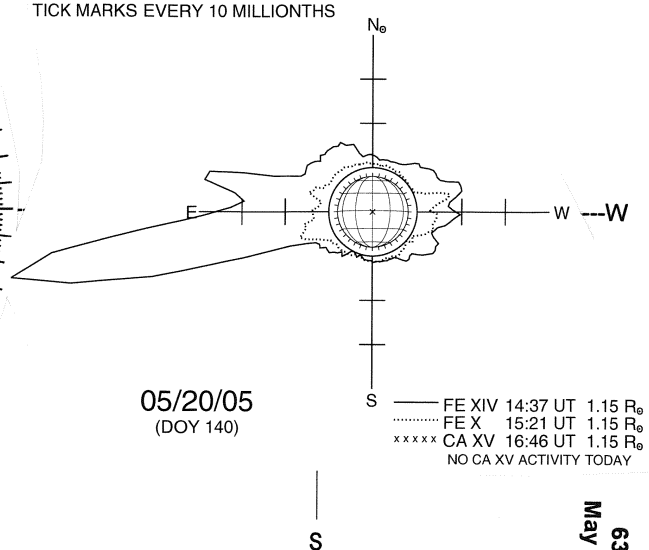


05/20/05
(DOY 140)

FE XIV 14:37 UT 1.15 R⊙
FE X 15:21 UT 1.15 R⊙
xxxxx CA XV 16:46 UT 1.15 R⊙
NO CA XV ACTIVITY TODAY

S