MAY 16, 2005 (P= -20.68, Bo = -2.55, Lo = 33.85)

KITT PEAK MAGNETOGRAM--SOLIS

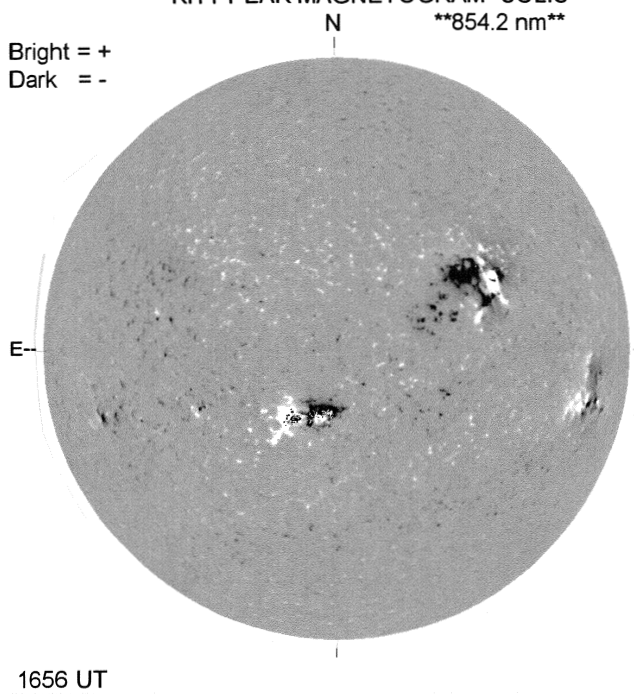

STANFORD MAGNETOGRAM

MT. WILSON MAGNETOGRAM

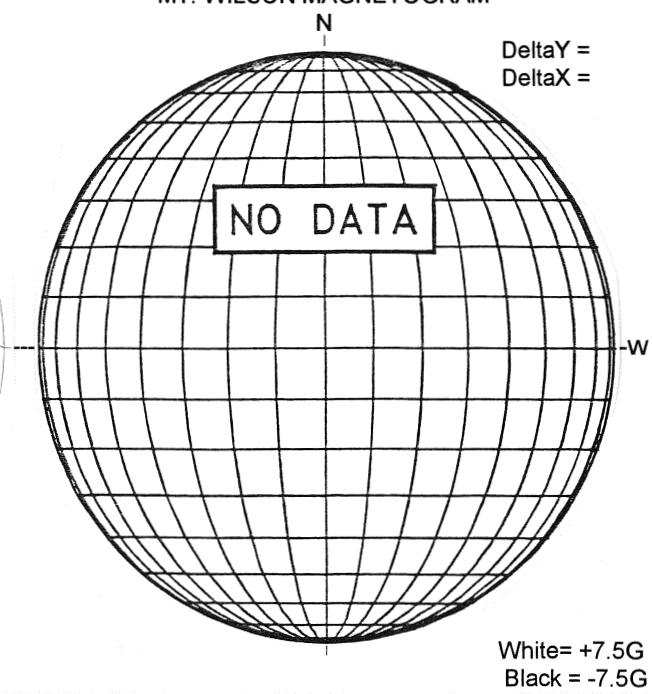

----- YUNNAN H-ALPHA

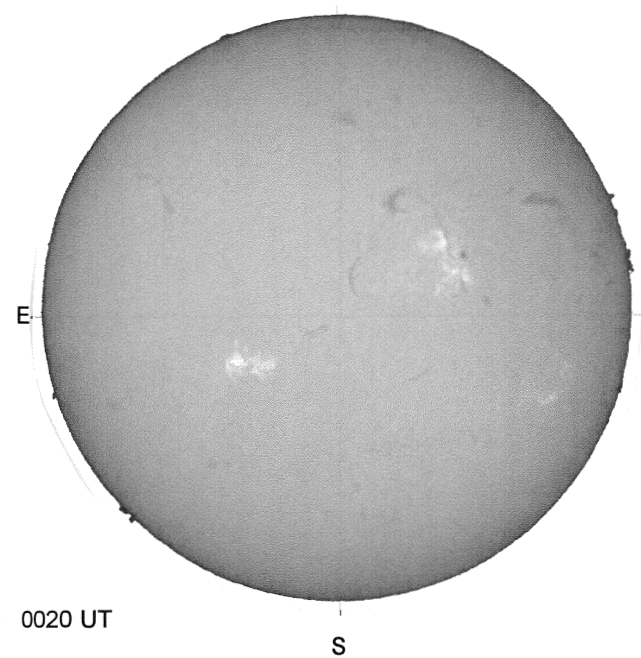

HOLLOMAN SUNSPOTS

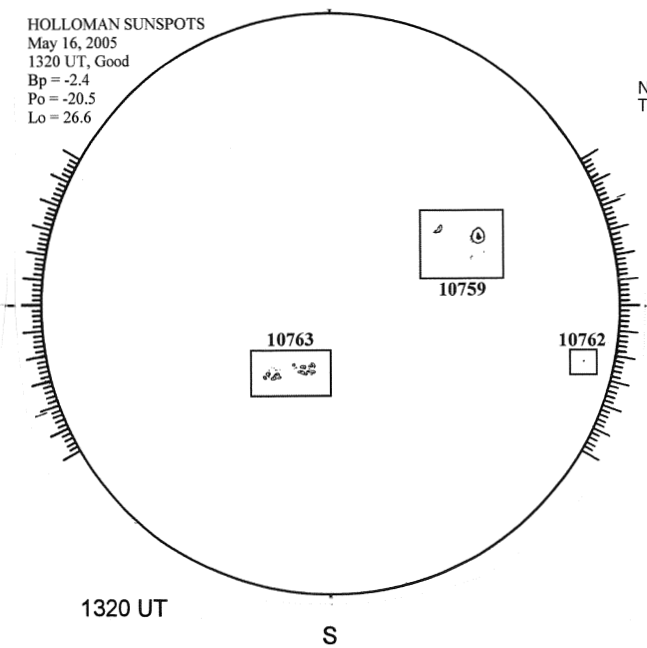
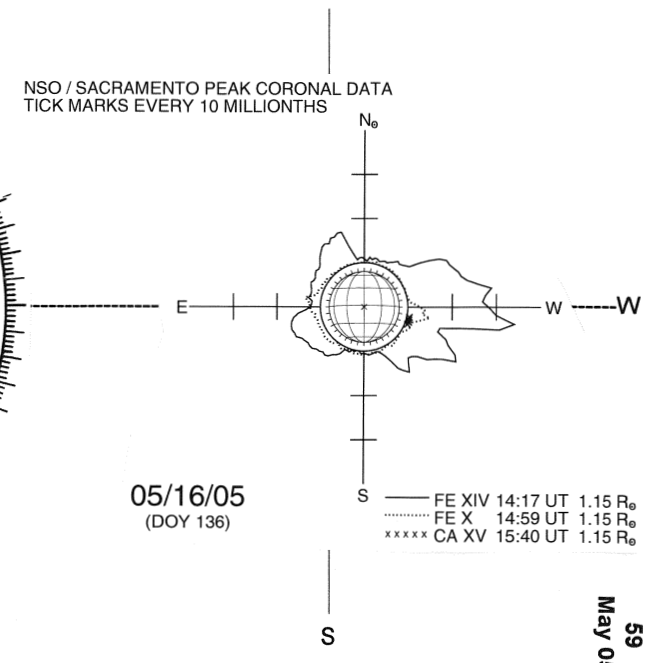
SACRAMENTO PEAK CORONA (1.15 Radii)----