**MAY 14, 2005 ( P= -21.23, Bo = -2.77, Lo = 60.30)**

KITT PEAK MAGNETOGRAM--SOLIS

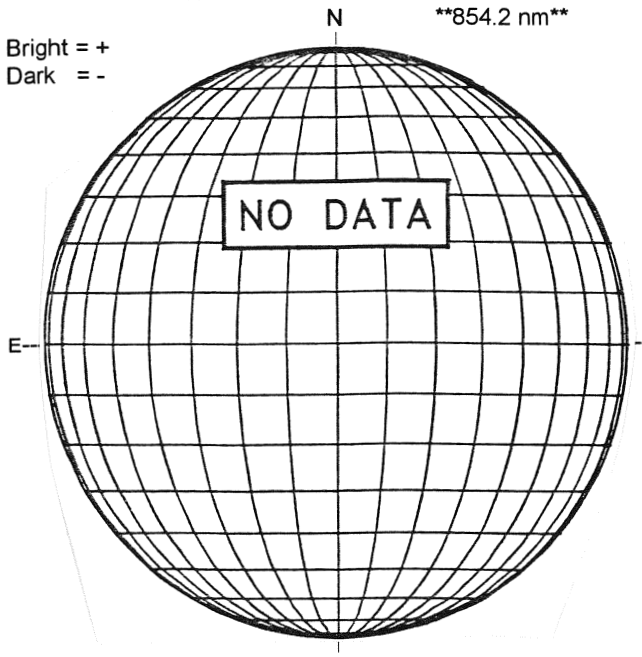


STANFORD MAGNETOGRAM

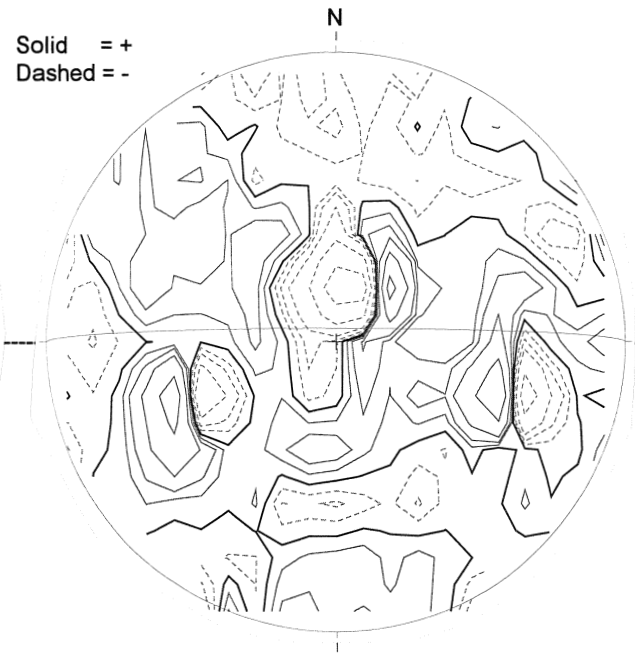


2153 UT

MT. WILSON MAGNETOGRAM

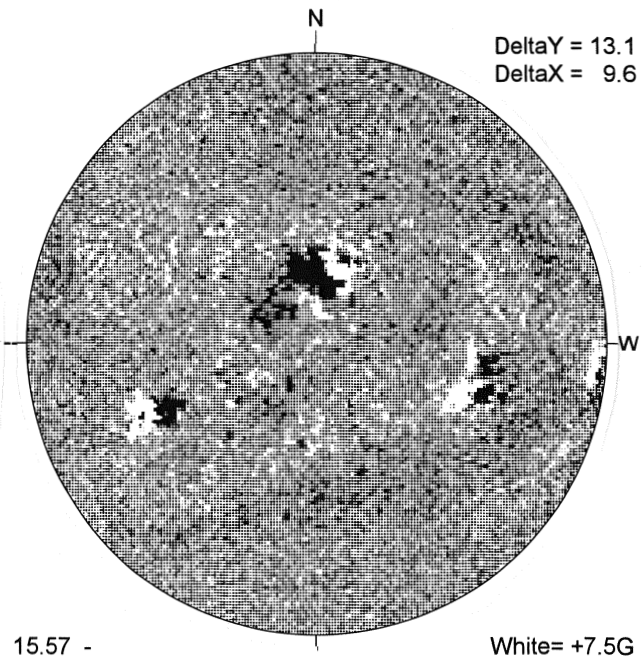


15.57 -
16.50 UT

KANZELHOHE H-ALPHA

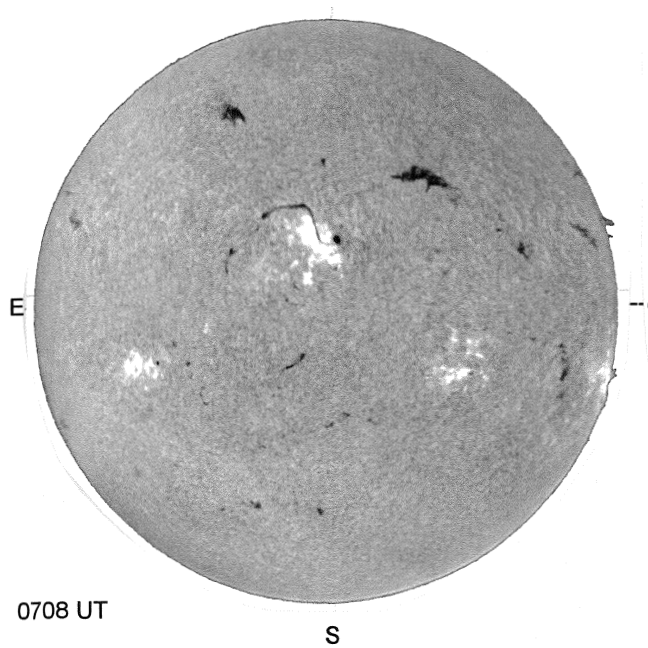


0708 UT

S

HOLLOMAN SUNSPOTS

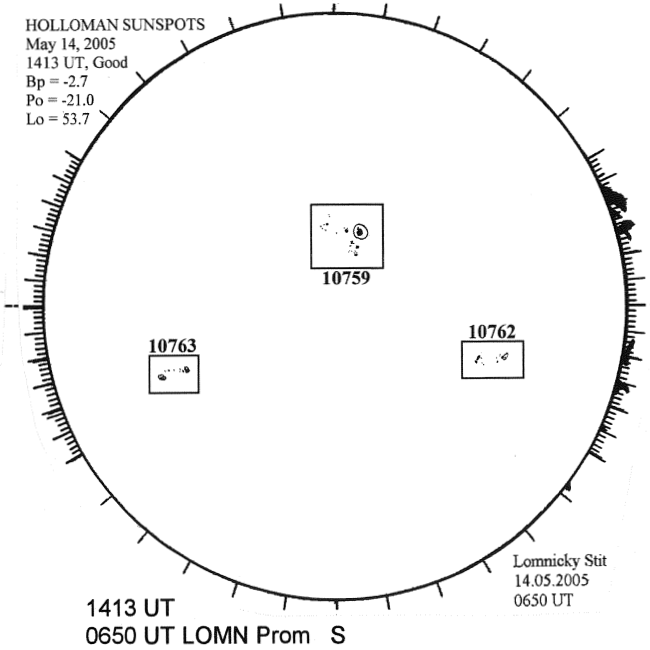


1413 UT
0650 UT LOMN Prom S

LOMNICKY PEAK CORONA (1.04 Radii)----

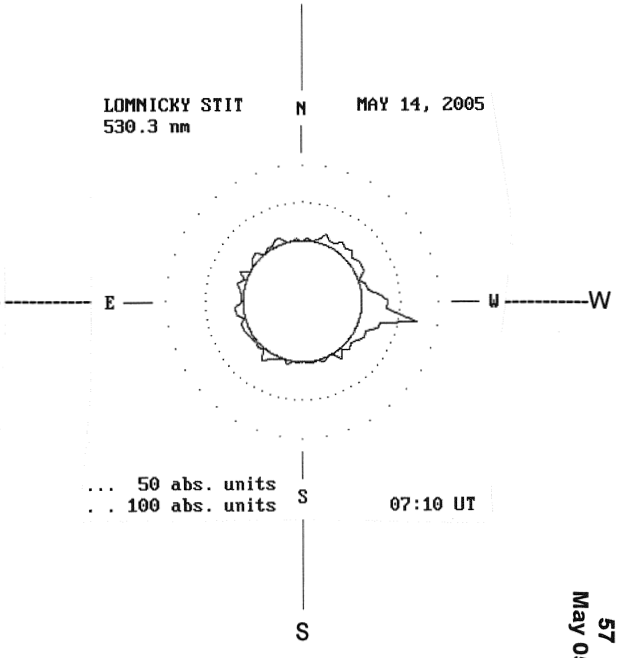


S