MAY 12, 2005 (P= -21.75, Bo = -3.00, Lo = 86.75)

KITT PEAK MAGNETOGRAM--SOLIS

854.2 nm

Bright = +
Dark = -

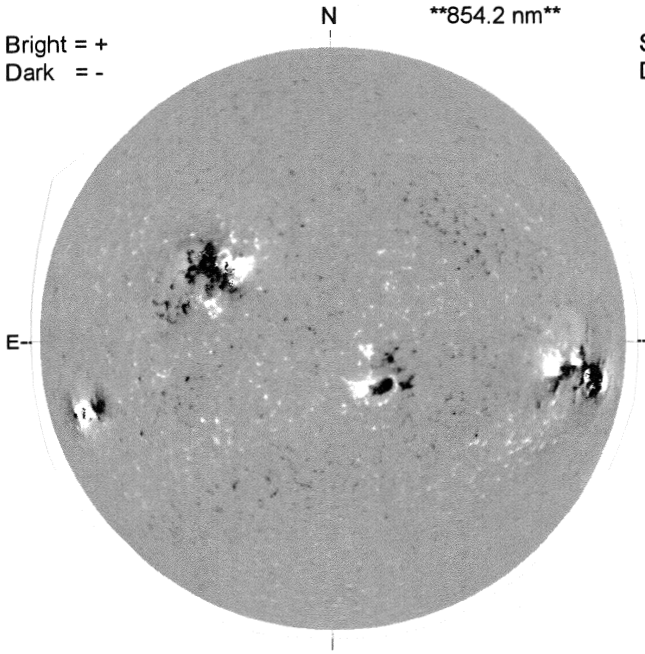

1729 UT

STANFORD MAGNETOGRAM

Solid = +
Dashed = -

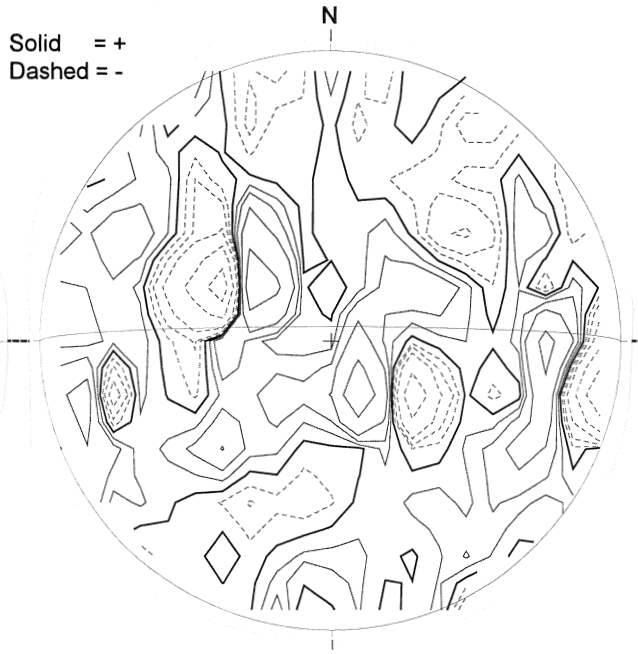

2135 UT

MT. WILSON MAGNETOGRAM

DeltaY = 13.1
DeltaX = 9.6

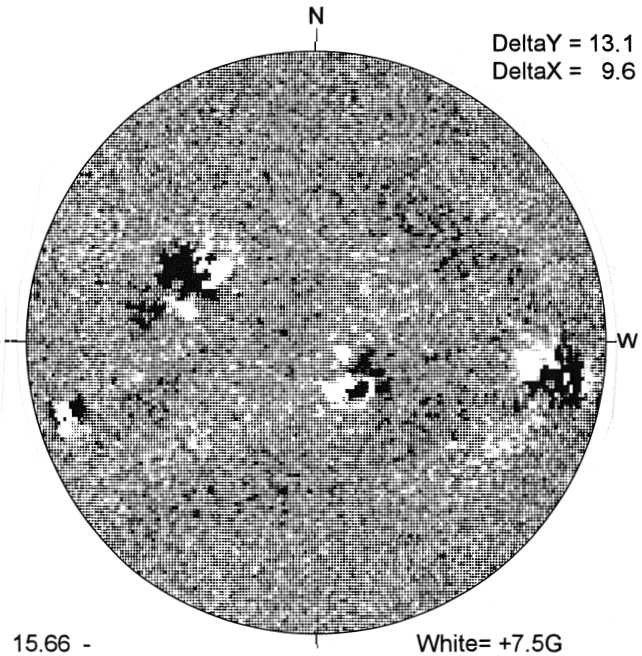

15.66 -
16.59 UT

White= +7.5G
Black = -7.5G

---- BIG BEAR H-ALPHA

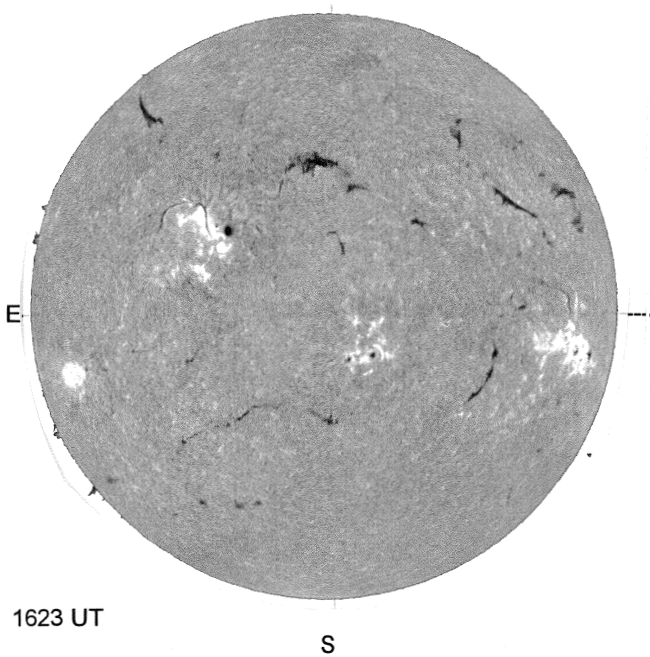

1623 UT

HOLLOMAN SUNSPOTS

HOLLOMAN SUNSPOTS
May 12, 2005
1455 UT, Good
Bp = -2.9
Po = -21.6
Lo = 79.7

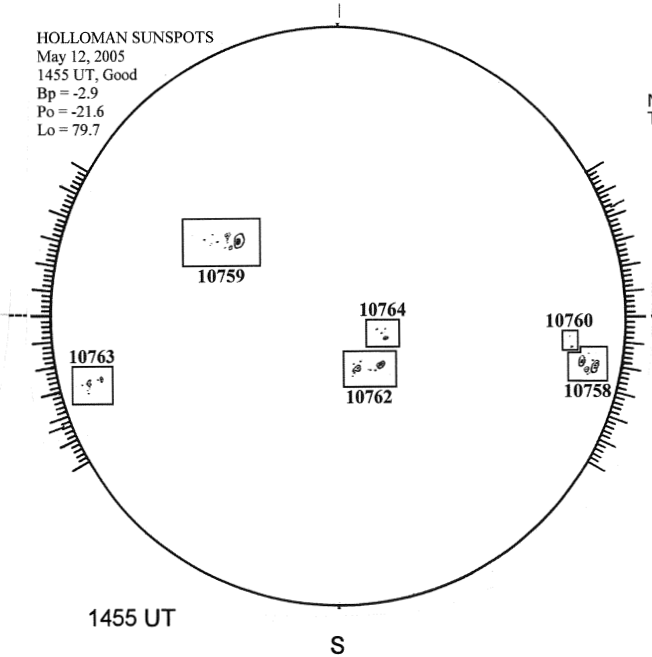

1455 UT

SACRAMENTO PEAK CORONA (1.15 Radii)----

NSO / SACRAMENTO PEAK CORONAL DATA
TICK MARKS EVERY 10 MILLIONTHS

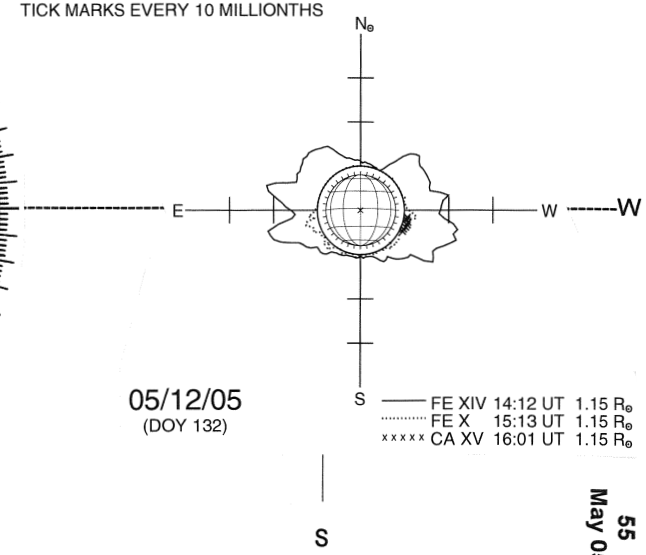

05/12/05
(DOY 132)

FE XIV 14:12 UT 1.15 R⊙
FE X 15:13 UT 1.15 R⊙
CA XV 16:01 UT 1.15 R⊙

S