MAY 11, 2005 (P= -22.00, Bo = -3.11, Lo = 99.97)

KITT PEAK MAGNETOGRAM--SOLIS

854.2 nm

Bright = +
Dark = -

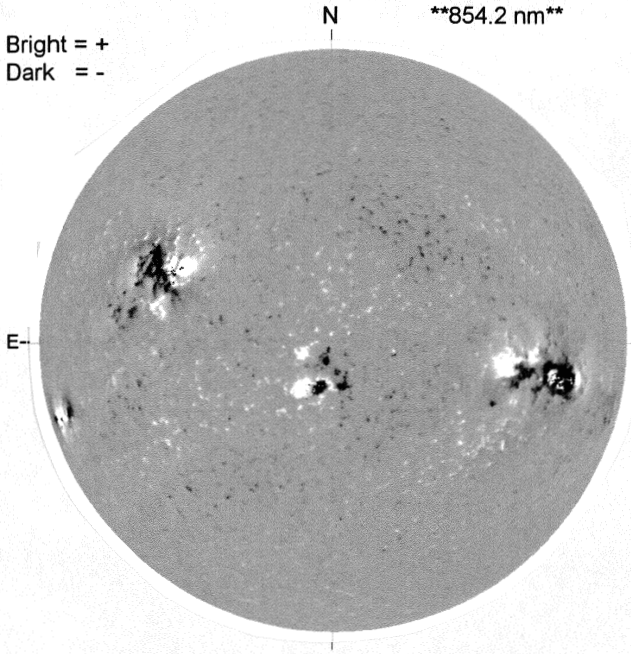

1821 UT

STANFORD MAGNETOGRAM

Solid = +
Dashed = -

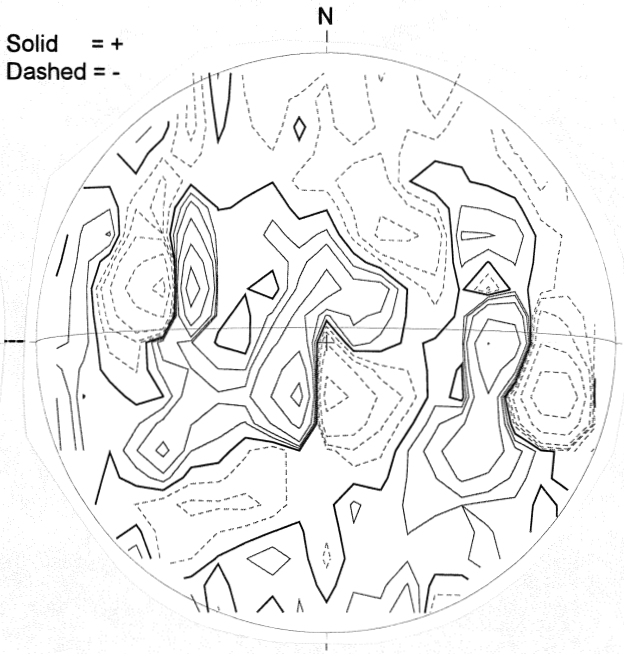

1926 UT

MT. WILSON MAGNETOGRAM

DeltaY = 13.1
DeltaX = 9.6

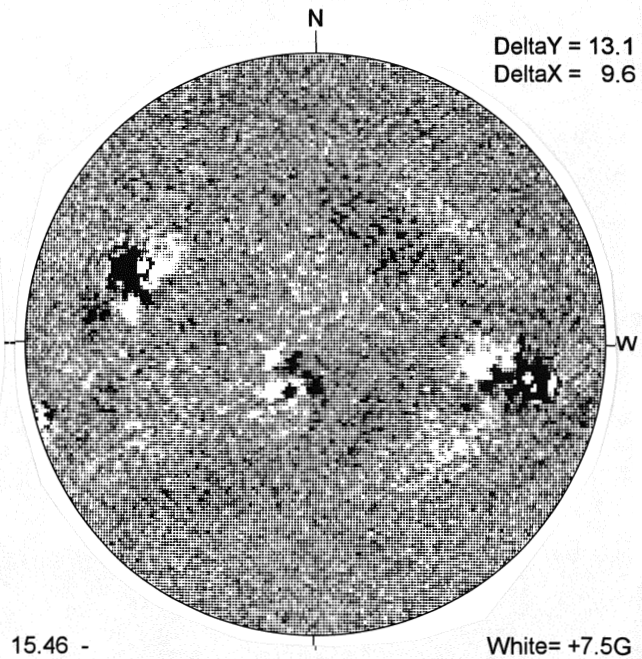

15.46 -
16.39 UT

White= +7.5G
Black = -7.5G

BIG BEAR H-ALPHA

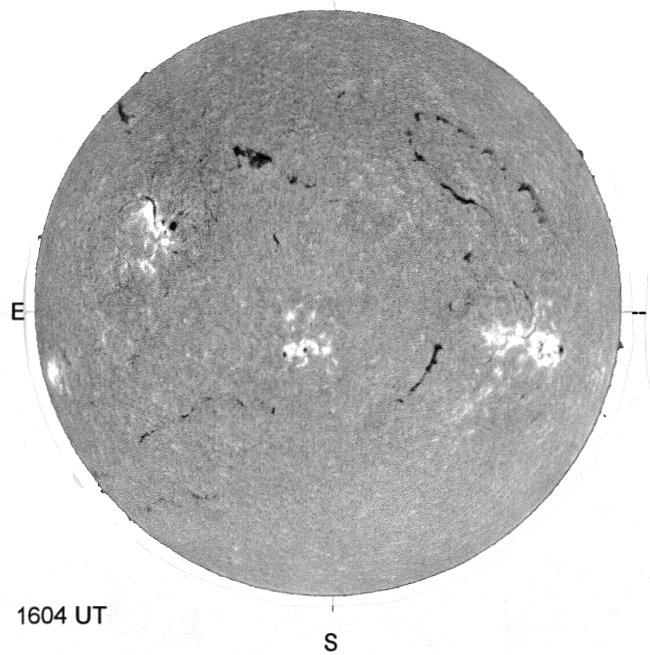

1604 UT

HOLLOMAN SUNSPOTS

HOLLOMAN SUNSPOTS
May 11, 2005
1536 UT, Good
Bp = -3.0
Po = -21.8
Lo = 93.3

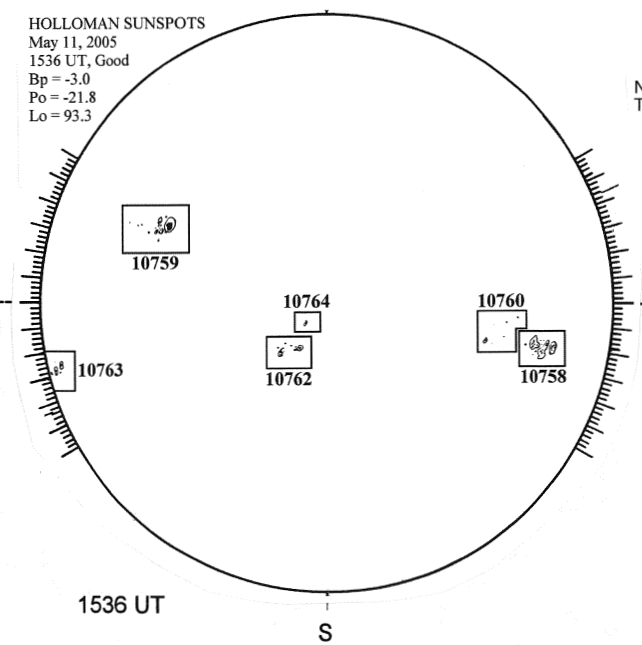

1536 UT

SACRAMENTO PEAK CORONA (1.15 Radii)

NSO / SACRAMENTO PEAK CORONAL DATA
TICK MARKS EVERY 10 MILLIONTHS

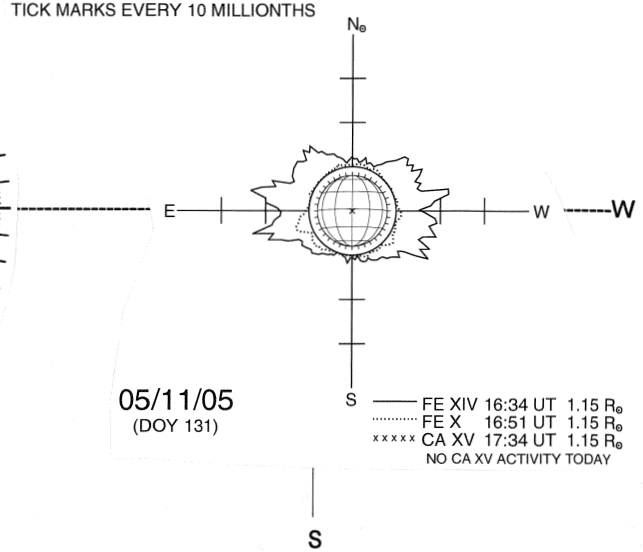

05/11/05
(DOY 131)

FE XIV 16:34 UT 1.15 $R_\odot$
FE X 16:51 UT 1.15 $R_\odot$
xxxxx CA XV 17:34 UT 1.15 $R_\odot$
NO CA XV ACTIVITY TODAY