APRIL 28, 2005 (P= -24.63, Bo = -4.46, Lo = 271.82)

KITT PEAK MAGNETOGRAM--SOLIS

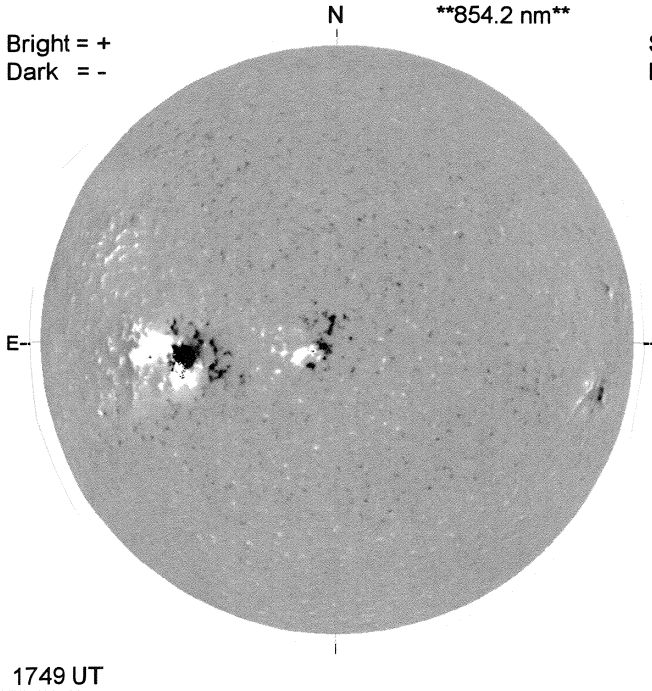

STANFORD MAGNETOGRAM

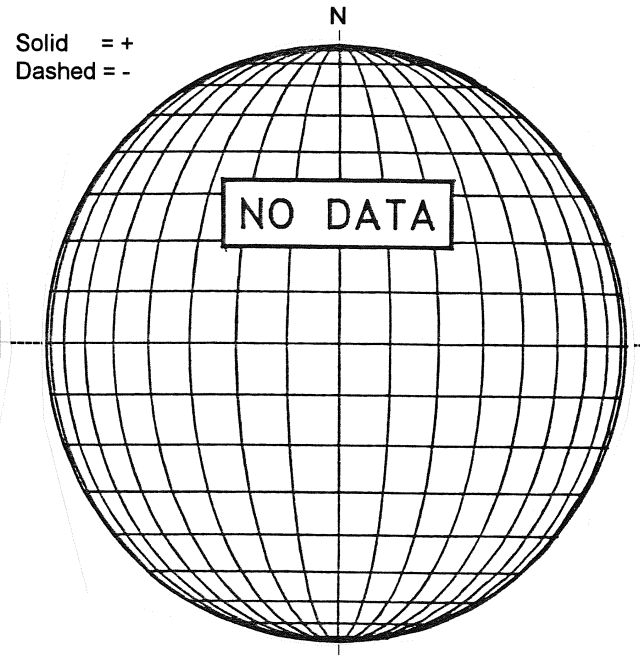

MT. WILSON MAGNETOGRAM

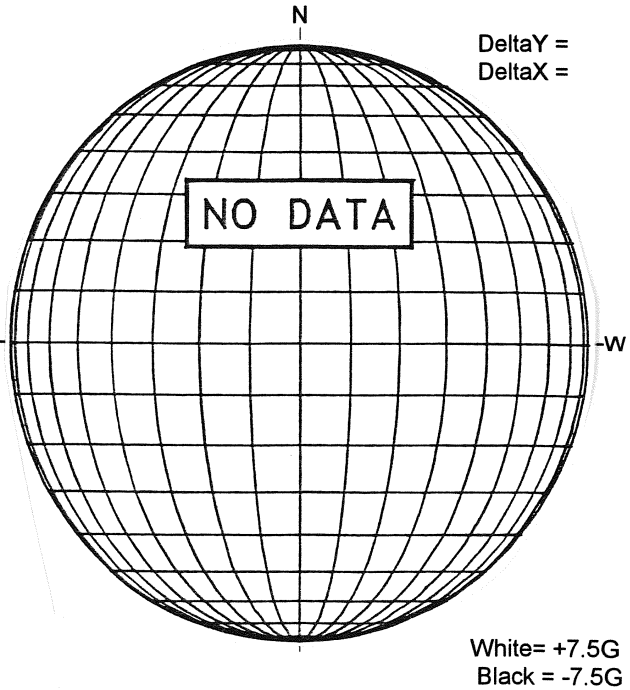

KANZELHOHE H-ALPHA

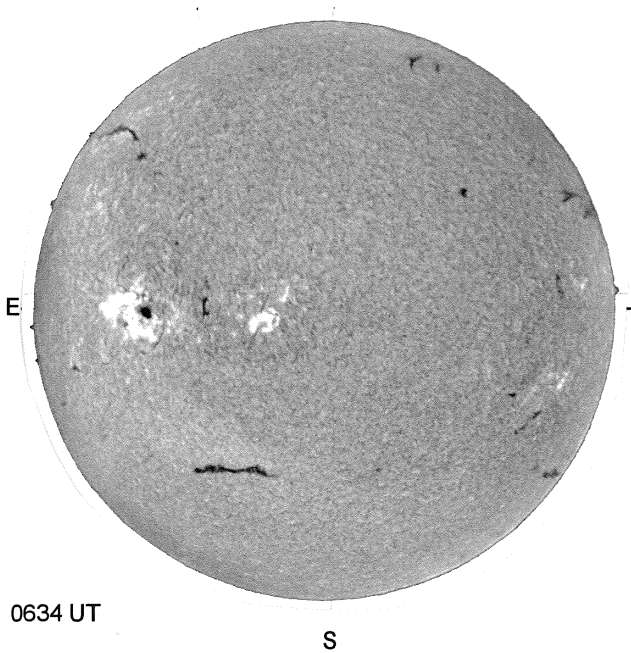

HOLLOMAN SUNSPOTS

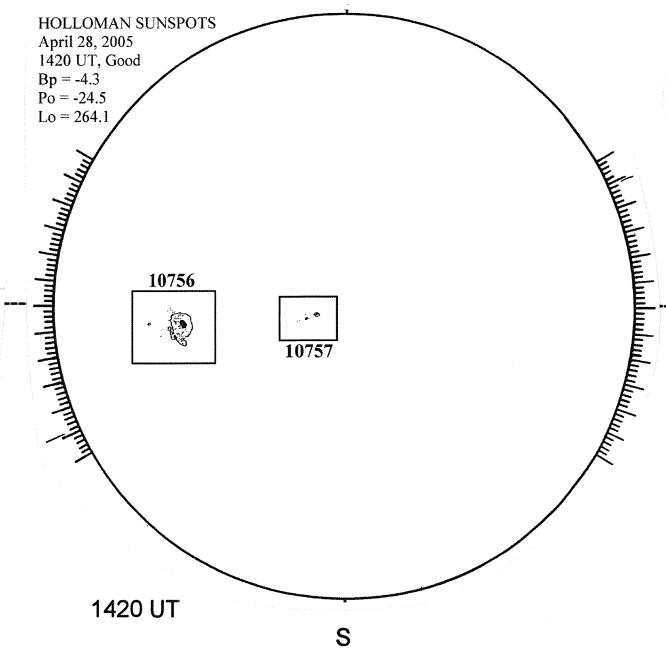
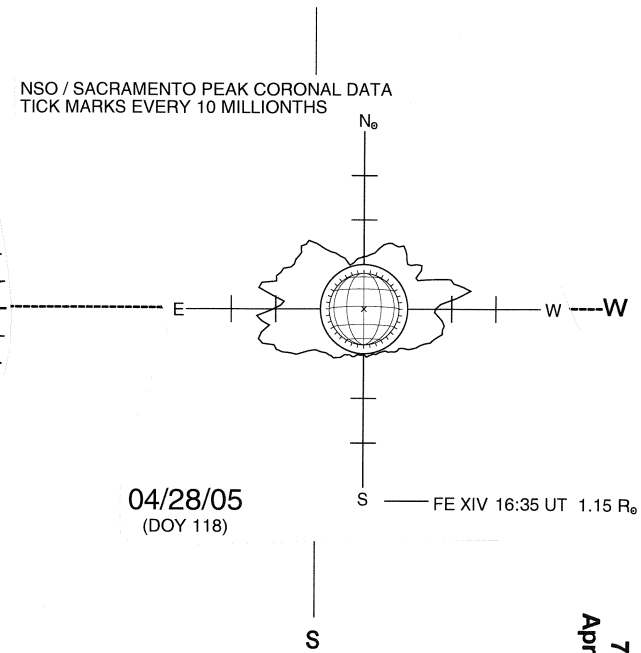
SACRAMENTO PEAK CORONA (1.15 Radii)----