APRIL 27, 2005 (P= -24.79, Bo = -4.56, Lo = 285.03)

KITT PEAK MAGNETOGRAM--SOLIS

Bright = +
Dark = -

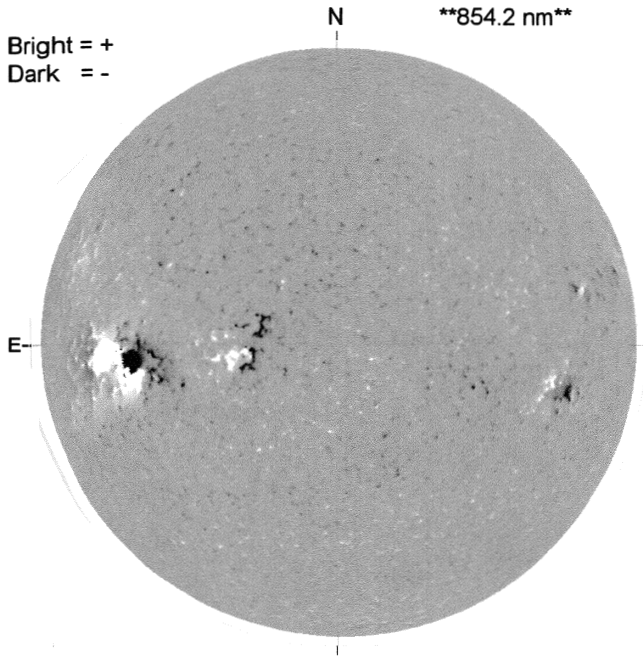

1704 UT

STANFORD MAGNETOGRAM

Solid = +
Dashed = -

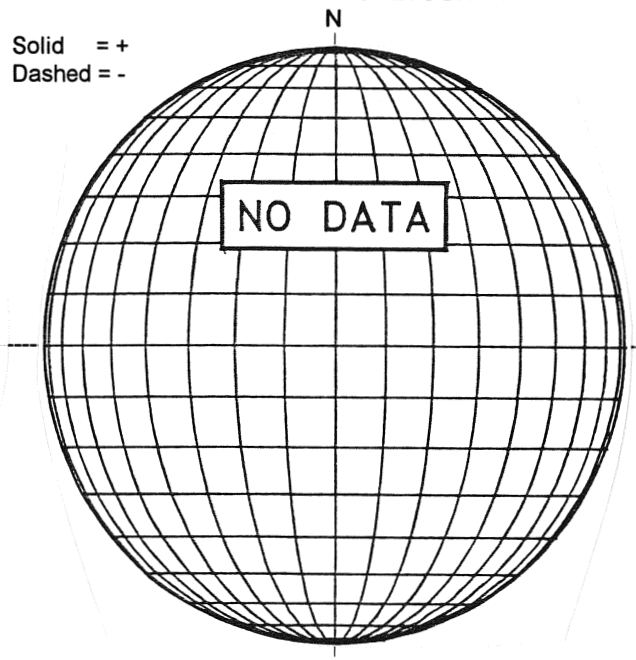

MT. WILSON MAGNETOGRAM

DeltaY =
DeltaX =

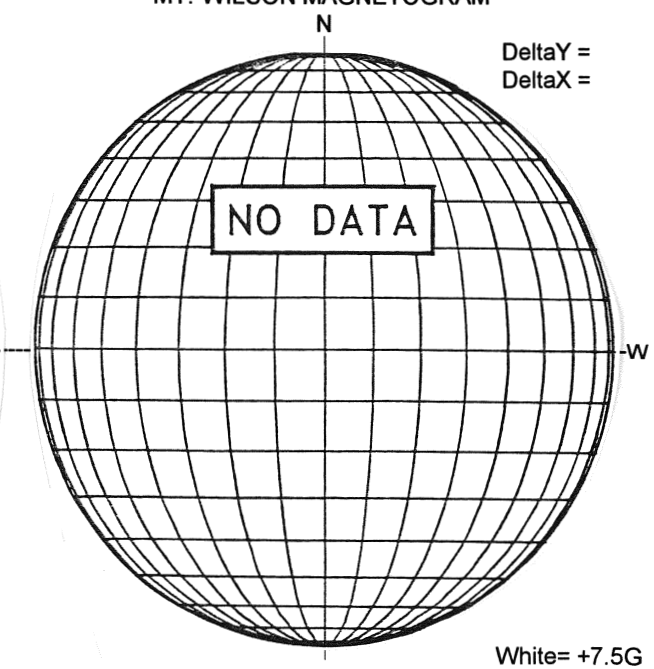

White= +7.5G
Black = -7.5G

BIG BEAR H-ALPHA

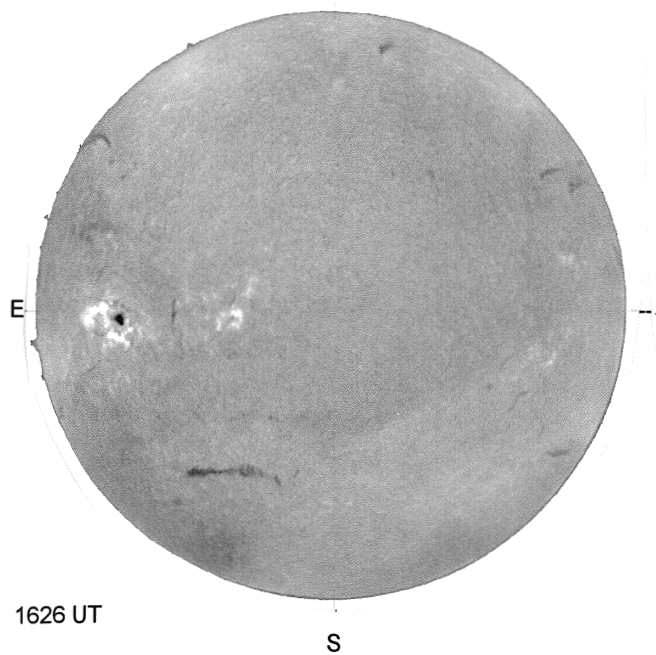

1626 UT

HOLLOMAN SUNSPOTS

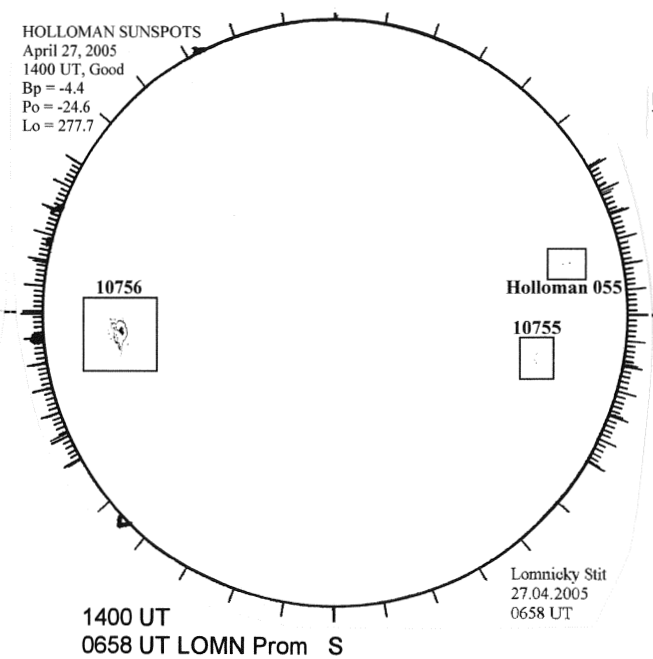

1400 UT
0658 UT LOMN Prom

SACRAMENTO PEAK CORONA (1.15 Radii)

NSO / SACRAMENTO PEAK CORONAL DATA
TICK MARKS EVERY 10 MILLIONTHS

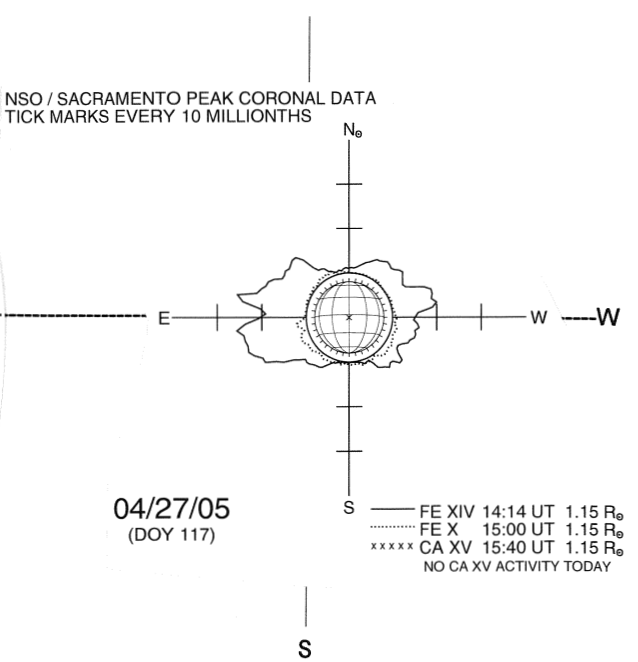

04/27/05
(DOY 117)

FE XIV 14:14 UT 1.15 $R_\odot$
FE X 15:00 UT 1.15 $R_\odot$
CA XV 15:40 UT 1.15 $R_\odot$
NO CA XV ACTIVITY TODAY