APRIL 25, 2005 (P= -25.07, Bo = -4.74, Lo = 311.46)

KITT PEAK MAGNETOGRAM--SOLIS

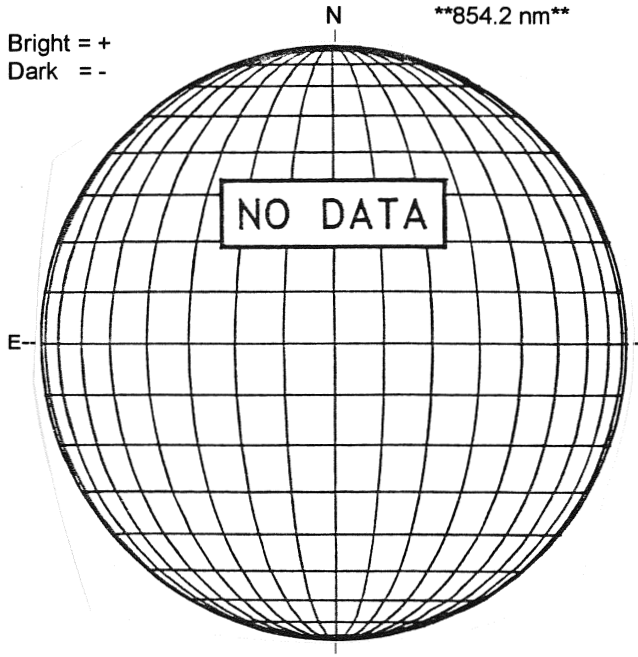

STANFORD MAGNETOGRAM

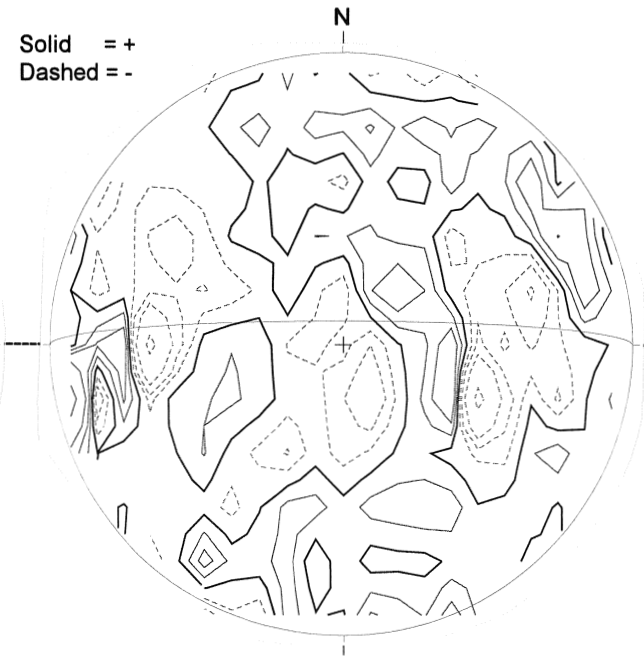

MT. WILSON MAGNETOGRAM

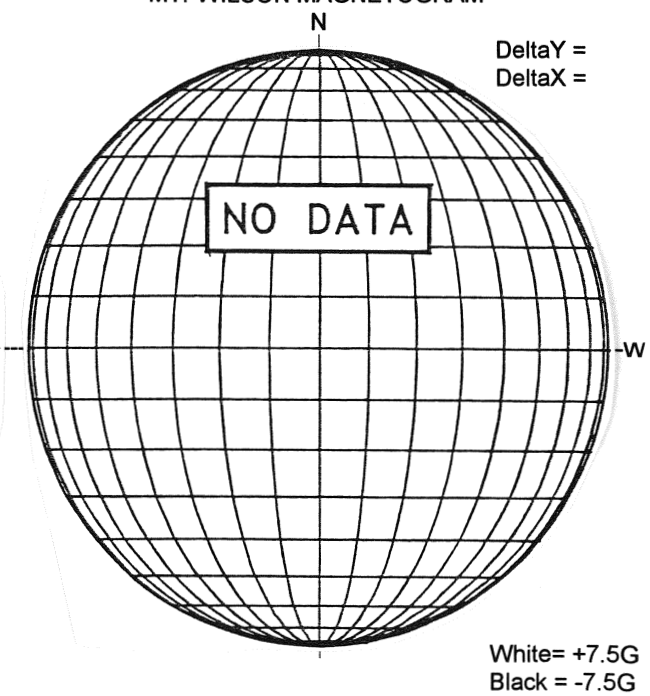

BIG BEAR H-ALPHA

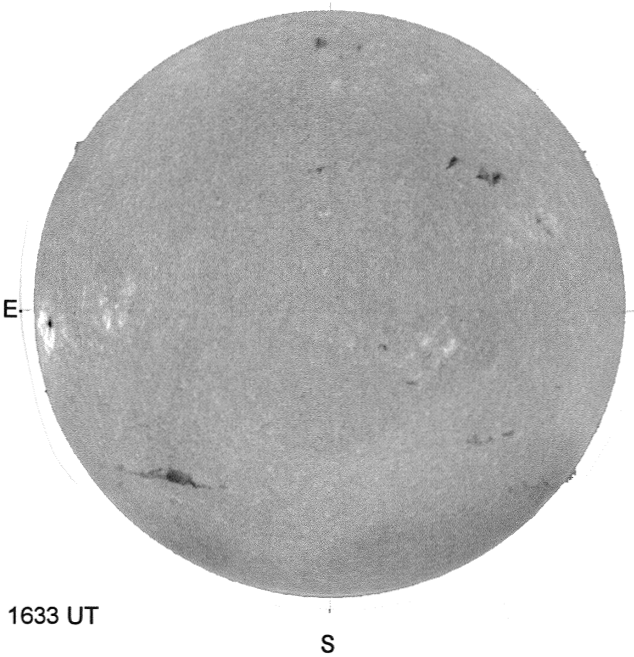

HOLLOMAN SUNSPOTS

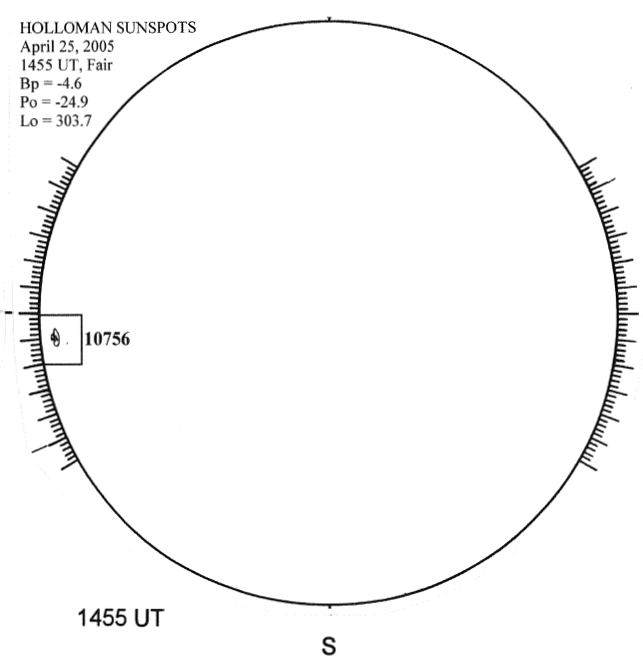
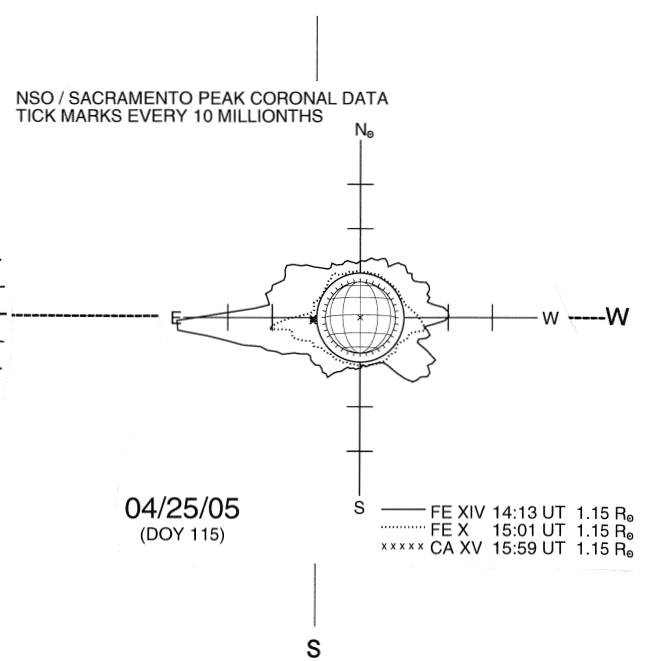
SACRAMENTO PEAK CORONA (1.15 Radii)----