APRIL 21, 2005 (P= -25.54, Bo = -5.11, Lo = 4.30)

KITT PEAK MAGNETOGRAM--SOLIS

854.2 nm

Bright = +
Dark = -

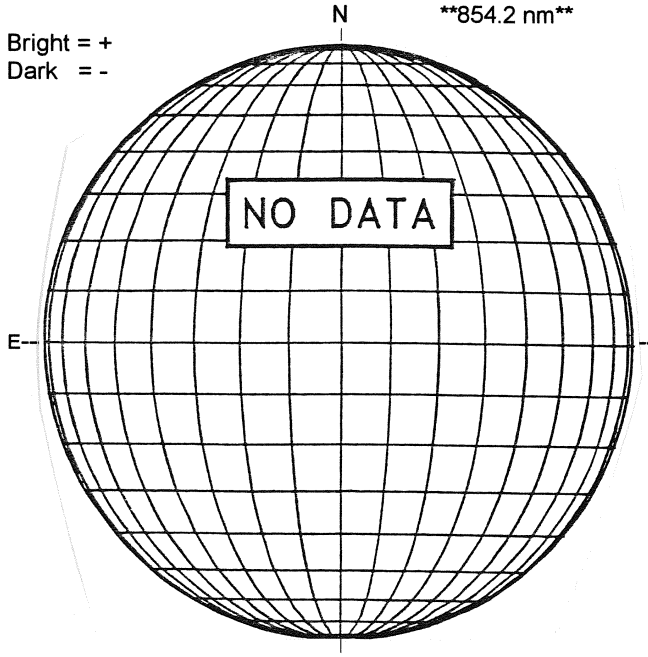

STANFORD MAGNETOGRAM

Solid = +
Dashed = -

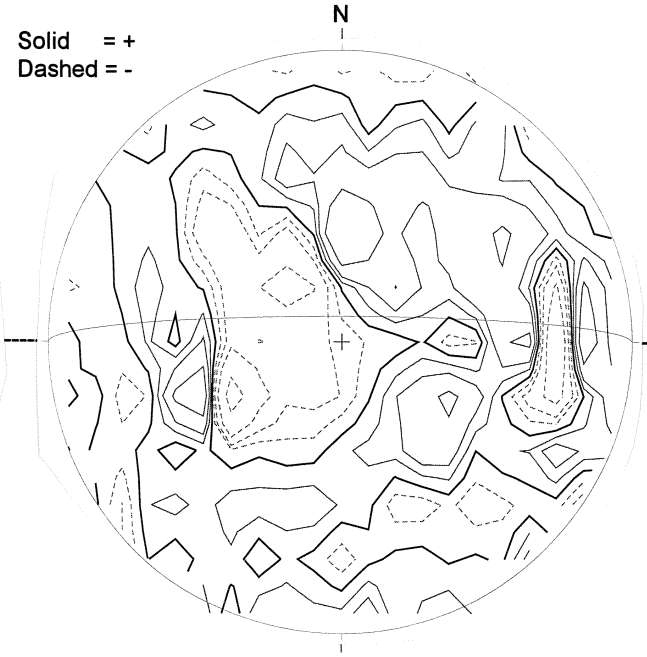

2252 UT

MT. WILSON MAGNETOGRAM

DeltaY = 13.1
DeltaX = 9.6

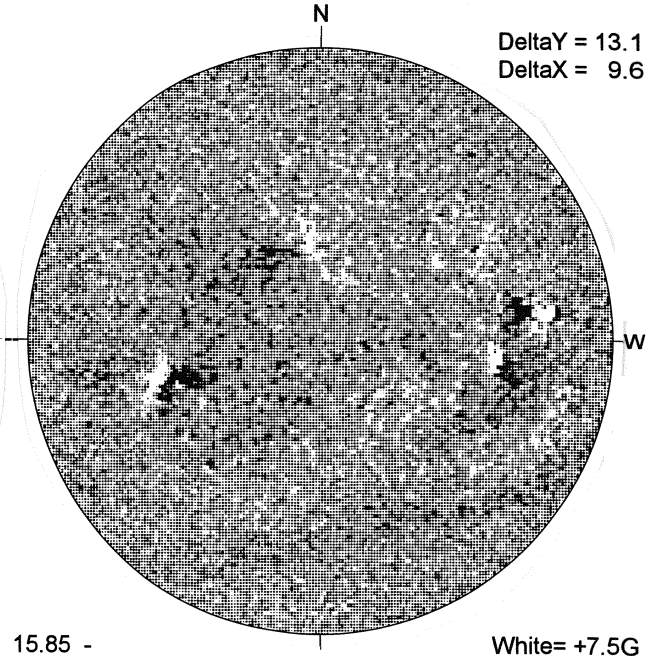

15.85 -
16.78 UT

White= +7.5G
Black = -7.5G

BIG BEAR H-ALPHA

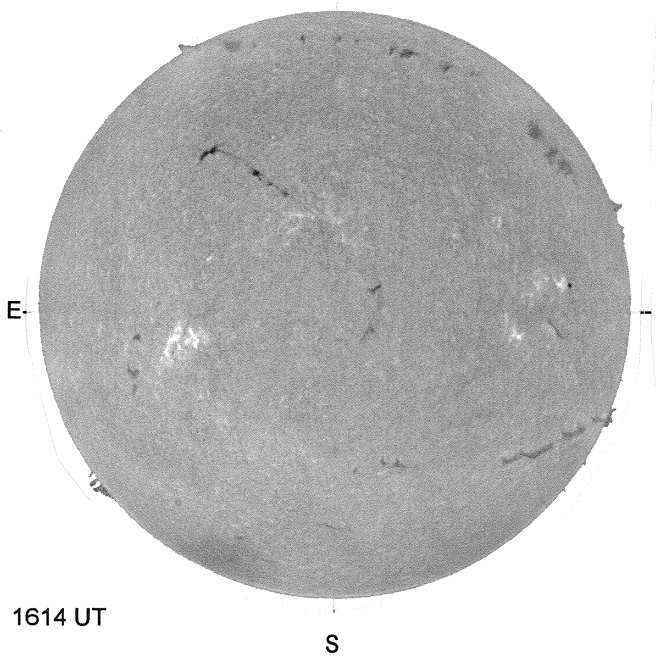

1614 UT

HOLLOMAN SUNSPOTS

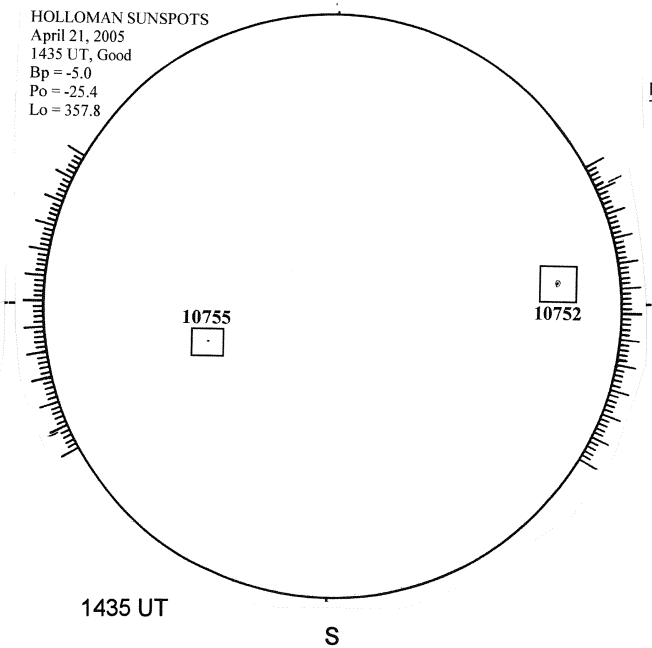

1435 UT
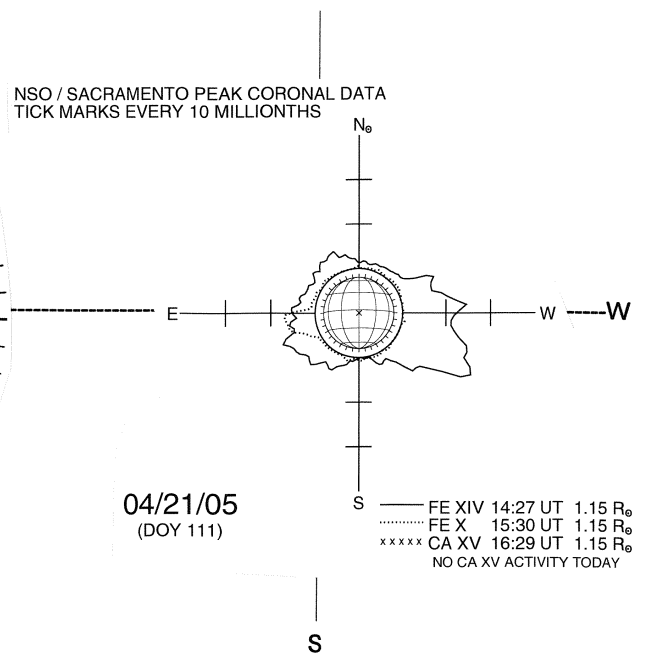
SACRAMENTO PEAK CORONA (1.15 Radii)